# ADMINISTRATIVE APPROVAL - SITE PLAN REVIEW (SPR #1829)
# AGENT APPROVAL - INLAND WETLANDS & WATERCOURSES AGENCY (IW #613)
# BURLINGTON COAT FACTORY EXPANSION AT BROOKSIDE PLAZA

## 50 HAZARD AVENUE aka 10 HAZARD AVENUE
## MAP 56, LOT 22
## TOWN OF ENFIELD, HARTFORD COUNTY, CONNECTICUT

## CIVIL DRAWING INDEX

| SHEET NUMBER | SHEET NAME | DRAWING TITLE | DATE | LAST REVISED |
|---|---|---|---|---|
| 1 | CS001 | COVER SHEET | 5/22/2020 | 9/21/2020 |
| 2 | VT401 | PARTIAL BOUNDARY & TOPOGRAPHIC SURVEY | 5/11/2020 | |
| 3 | CS002 | GENERAL NOTES & MASTER LEGEND | 5/22/2020 | 9/21/2020 |
| 4 | CS100 | OVERALL SITE PLAN | 5/22/2020 | 9/21/2020 |
| 5 | CS101 | SITE PLAN | 5/22/2020 | 9/21/2020 |
| 6 | CS501 | SITE DETAILS | 5/22/2020 | 9/21/2020 |
| 7 | CS502 | SITE DETAILS II | 6/18/2020 | 9/21/2020 |
| 8 | CG101 | GRADING, DRAINAGE, UTILITY, AND EROSION CONTROL PLAN | 5/22/2020 | 9/21/2020 |
| 9 | CG501 | GRADING, DRAINAGE, UTILITY, AND EROSION CONTROL DETAILS I | 5/22/2020 | 9/21/2020 |
| 10 | CG502 | GRADING, DRAINAGE, UTILITY, AND EROSION CONTROL DETAILS II | 5/22/2020 | 9/21/2020 |
| 11 | LL101 | SITE LIGHTING PLAN | 6/18/2020 | 9/21/2020 |
| 12 | LL501 | SITE LIGHTING DETAILS | 6/18/2020 | 9/21/2020 |

## ARCHITECTURAL DRAWING INDEX

| SHEET # | NUMBER | DRAWING TITLE | DATE | LAST REVISED |
|---|---|---|---|---|
| 13 | LOD-1 | PROPOSED LOD | 04/01/2020 | 09/17/2020 |

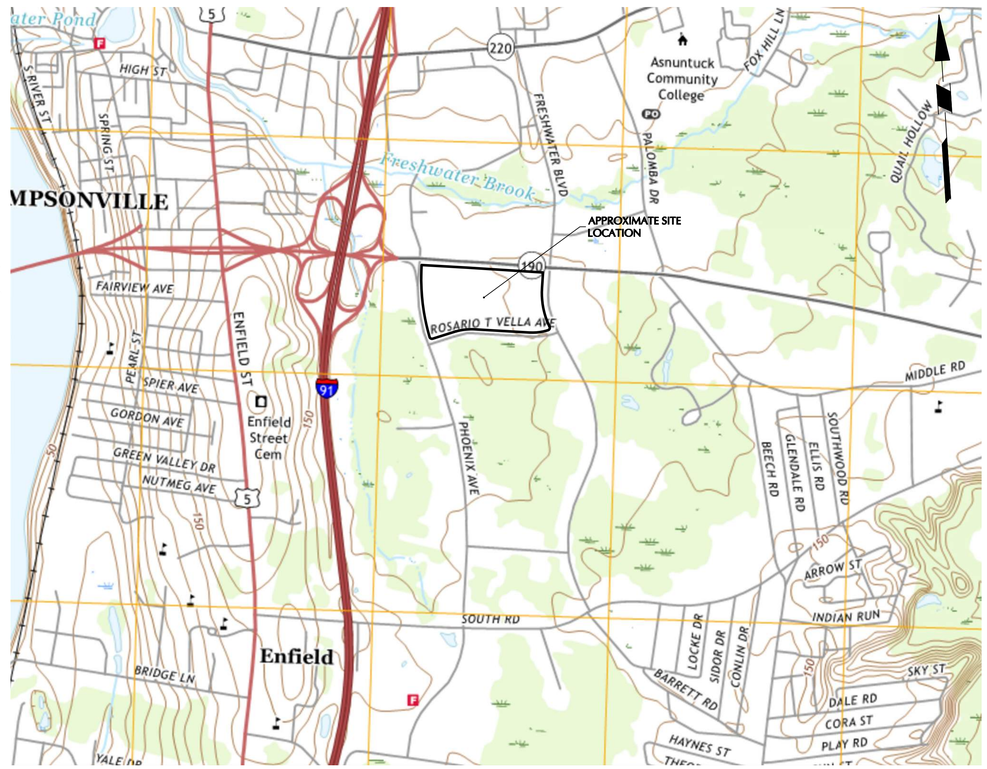


**MAP REFERENCE: USGS BROAD BROOK QUADRANGLE MAP 2018 (7.5-MINUTE SERIES)**

## LOCATION MAP

**SCALE: 1" = 1000'**

## ABUTTING PROPERTY OWNERS WITHIN 200'

| MAP | LOT | PROPERTY OWNER | PROPERTY LOCATION |
|---|---|---|---|
| 45 | 1 | JPMCC 2006-LDP7 CENTRO | 9 HAZARD AVE |
| | | 1601 WASHINGTON AVE, SUITE 700 | |
| | | MIAMI BEACH, FL 33139 | |
| 45 | 8 | PARAMOUNT COMMONS AT ENFIELD LLC | 25 HAZARD AVE |
| | | 1195 RT 70, SUITE 2000 | |
| | | LAKEWOOD, NJ 08701 | |
| 45 | 10 | G+R PROPERTIES LLC | 7 HAZARD AVE |
| | | 1111 ELM ST | |
| | | WEST SPRINGFIELD, MA 01089 | |
| 45 | 12 | ENFIELD LODGING LLC | 20 PHOENIX AVE |
| | | PO BOX 480 | |
| | | BUFFALO, NY 14201 | |
| 45 | 13 | TOWN OF ENFIELD | PHOENIX AVE |
| | | 820 ENFIELD ST | |
| | | ENFIELD, CT 06082 | |
| 45 | 75 | JPMCC 2006-LDP7 CENTRO | 94 ELM ST |
| | | 1601 WASHINGTON AVE, SUITE 700 | |
| | | MIAMI BEACH, FL 33139 | |
| 46 | 35 | TOWN OF ENFIELD | SOUTH RD |
| | | 820 ENFIELD ST | |
| | | ENFIELD, CT 06082 | |
| 56 | 1 | GMRI INC | 41 HAZARD AVE |
| | | PO BOX 695019 | |
| | | ORLANDO, FL 32869 | |
| 56 | 2 | LEO BHW LTD LLC | 39 HAZARD AVE |
| | | 2475 ALBANY AVE, SUITE 205 | |
| | | WEST HARTFORD, CT 06117 | |
| 56 | 4 | FRESHWATER BOULEVARD RLTY LLC | 95 FRESHWATER BLVD |
| | | 2694 BOSTON RD | |
| | | WILBRAHAM, MA 01095 | |
| 56 | 21 | TOWN OF ENFIELD | FRESHWATER BLVD |
| | | 820 ENFIELD ST | |
| | | ENFIELD, CT 06082 | |
| 56 | 24 | SKT FRESHWATER LLC | 135 FRESHWATER BLVD |
| | | 342 NORTH MAIN ST, SUITE 200 | |
| | | WEST HARTFORD, CT 06107 | |
| 56 | 26 | ENFIELD STATION LLC | 54 HAZARD AVE |
| | | 11501 NORTH LAKE DR | |
| | | CINCINNATI, OH 45249 | |

## RELEASE DATES

| DATE | ISSUED FOR |
|---|---|
| 5/22/2020 | IWWA DETERMINATION SUBMISSION |
| 6/18/2020 | P&Z SUBMISSION |
| 9/21/2020 | P&Z ADMINISTRATIVE APPROVAL/IWWA AGENT APPROVAL |
| | |
| | |
| | |


OWNER/DEVELOPER
EQUITY ONE (NORTHEAST PORTFOLIO), LLC
C/O MICHAEL LAI
28 CHURCH LANE, SUITE 200
WESTPORT, CONNECTICUT 06880
(203) 635-5570

ARCHITECT
SARGENTI
8 PENN CENTER
1628 JFK BOULEVARD
PHILADELPHIA, PA 19103
(215) 482-1950

LAND SURVEYOR, CIVIL ENGINEER,
& LANDSCAPE ARCHITECT
LANGAN CT, INC.
C/O NATHAN KIRSCHNER
555 LONG WHARF DRIVE
NEW HAVEN, CT 06511
(203) 562-5771


LANGAN

PROJECT No. 140161101

## NOTES

1. THIS SURVEY HAS BEEN PREPARED PURSUANT TO THE REGULATIONS OF CONNECTICUT STATE AGENCIES SECTIONS 20–300b–1 THROUGH 20–300b–20 AND THE "STANDARDS FOR SURVEYS AND MAPS IN THE STATE OF CONNECTICUT" AS ADOPTED BY THE CONNECTICUT ASSOCIATION OF LAND SURVEYORS, INC. ON SEPTEMBER 26, 1996.
   a. THIS SURVEY IS A PROPERTY SURVEY CONFORMING TO A HORIZONTAL ACCURACY OF A–2 AND A TOPOGRAPHIC SURVEY CONFORMING TO A T–2 ACCURACY. THE BOUNDARY DETERMINATION IS A RESURVEY. THE PURPOSE OF THIS SURVEY IS TO PROVIDE A BOUNDARY OPINION AND DEPICT SITE FEATURES FOR FUTURE SITE DEVELOPMENT.
2. THIS SURVEY IS BASED UPON EXISTING PHYSICAL CONDITIONS FOUND AT THE SUBJECT SITE, DEED INFORMATION AND THE FOLLOWING REFERENCES:

   A. MAP TITLED "ALTA/ACSM LAND TITLE SURVEY, PROPERTY SURVEY, PREPARED FOR EQUITY ONE (NORTHEAST PORTFOLIO), INC, 10 HAZARD AVE. (CONN. ROUTE 190), ENFIELD, CONNECTICUT", SCALE: 1"=60', DATED: 06–22–15, LAST REVISED: 03–09–2016, BY: F.A. HESKETH & ASSOCIATES, INC
3. THE MERIDIAN OF THIS SURVEY IS REFERENCED TO CONNECTICUT STATE PLANE COORDINATE SYSTEM NAD 83 (EPOCH 2011). POSITION WAS DETERMINED BY GLOBAL NAVIGATION SATELLITE SYSTEMS (GNSS) AS PROVIDED BY HXGN SMARTNET CONTINUOUSLY OPERATED REFERENCE STATIONS (CORS).
4. ELEVATIONS SHOWN ARE REFERENCED TO NORTH AMERICAN VERTICAL DATUM OF 1988 (NAVD88) (GEOID 12B) AS DETERMINED BY GNSS
5. PLANIMETRIC AND TOPOGRAPHIC INFORMATION SHOWN HEREON HAS BEEN OBTAINED FROM GROUND SURVEYS BY LANGAN CT, INC. FIELD WORK COMPLETED DURING THE MONTH OF MAY 2020.
6. AS PER THE NATIONAL FLOOD INSURANCE PROGRAM FIRM MAP ENTITLED "HARTFORD COUNTY, CONNECTICUT PANEL 227 OF 675, MAP NUMBER 09003C0227F, EFFECTIVE DATE SEPTEMBER 26, 2008" THE PROJECT AREA IS IN ZONE X (UNSHADED).
7. UNLESS SPECIFICALLY NOTED HEREON, STORM AND SANITARY SEWER INFORMATION (INCLUDING PIPE INVERT, PIPE MATERIAL, AND PIPE SIZE) WAS OBSERVED AND MEASURED AT FIELD LOCATED STRUCTURES (MANHOLES/CATCH BASINS, ETC ). CONDITIONS CAN VARY FROM THOSE ENCOUNTERED AT THE TIMES WHEN AND LOCATIONS WHERE DATA IS OBTAINED. DESPITE MEETING THE REQUIRED STANDARD OF CARE, THE SURVEYOR CANNOT, AND DOES NOT WARRANT THAT PIPE MATERIAL AND/OR PIPE SIZE THROUGHOUT THE PIPE RUN ARE THE SAME AS THOSE OBSERVED AT EACH STRUCTURE, OR THAT THE PIPE RUN IS STRAIGHT BETWEEN THE LOCATED STRUCTURES.
8. ADDITIONAL UTILITY (WATER, GAS, ELECTRIC ETC.) DATA MAY BE SHOWN FROM FIELD LOCATED SURFACE MARKINGS (BY OTHERS), EXISTING STRUCTURES, AND/OR FROM EXISTING DRAWINGS.
9. UNLESS SPECIFICALLY NOTED HEREON, THE SURVEYOR HAS NOT EXCAVATED TO PHYSICALLY LOCATE THE UNDERGROUND UTILITIES. THE SURVEYOR MAKES NO GUARANTEES THAT THE SHOWN UNDERGROUND UTILITIES ARE EITHER IN SERVICE, ABANDONED OR SUITABLE FOR USE, NOR ARE IN THE EXACT LOCATION OR CONFIGURATION INDICATED HEREON.
10. ALL BUILDINGS AND STRUCTURES WERE LOCATED AND MEASURED AT GROUND LEVEL. THE SURVEYOR MAKES NO DETERMINATIONS OR GUARANTEES AS TO THE ABSENCE, EXISTENCE OR LOCATION OF UNDERGROUND STRUCTURES, FOUNDATIONS, FOOTINGS, PROJECTIONS, WALLS, TANKS, SEPTIC SYSTEMS, ETC. NO TEST PITS, EXCAVATIONS OR GROUND PENETRATING RADAR WERE PERFORMED AS PART OF THIS SURVEY.
11. PRIOR TO ANY DESIGN OR CONSTRUCTION, THE PROPER UTILITY AGENCIES MUST BE CONTACTED FOR VERIFICATION OF UTILITY TYPE AND FOR FIELD LOCATIONS.
12. THIS SURVEY IS NOT VALID WITHOUT THE EMBOSSED OR INKED SEAL OF THE PROFESSIONAL.

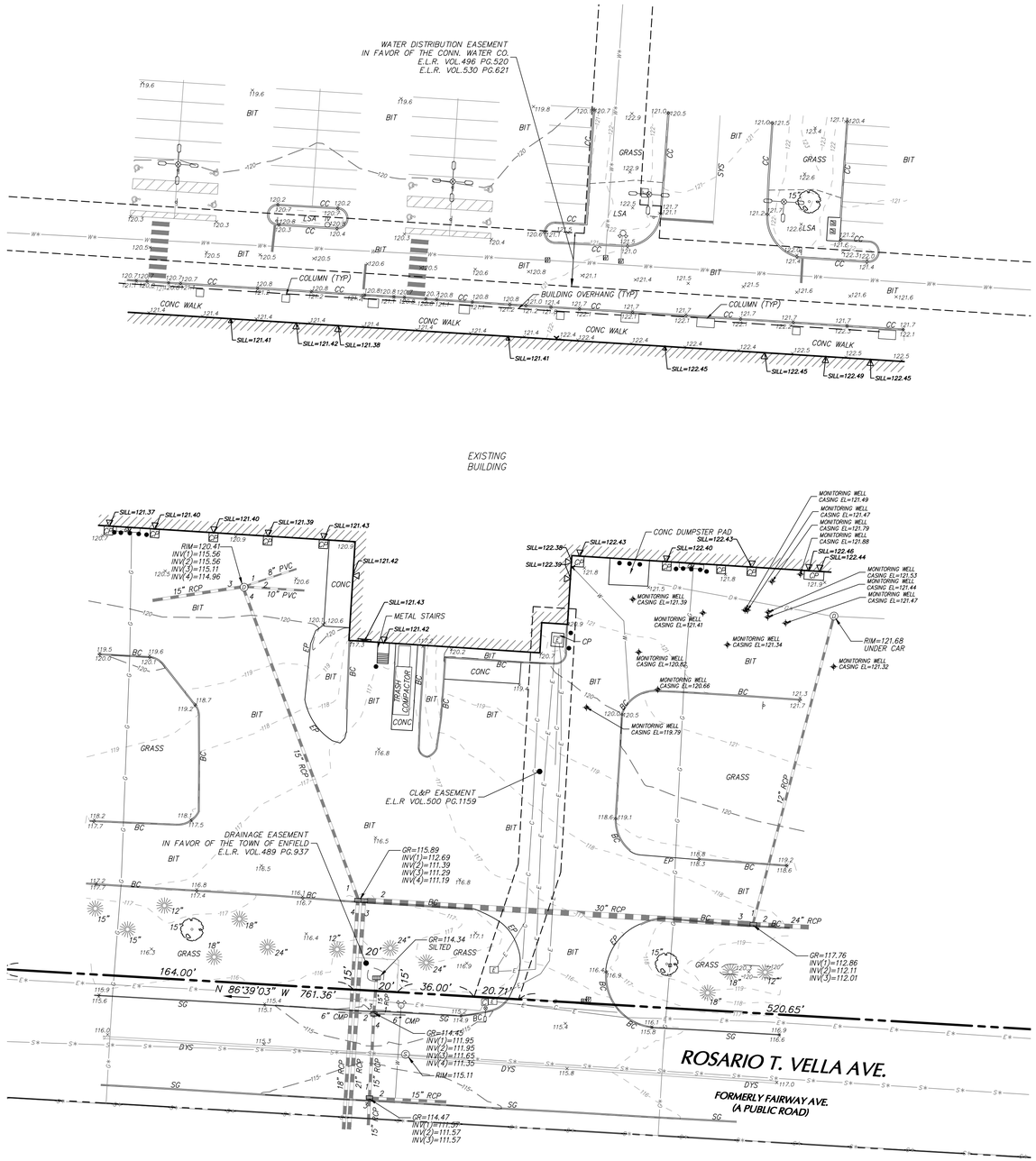


## LEGEND (NOT SHOWN TO SCALE)

- BOLLARD
- DOOR
- DOUBLE DOOR
- HANDICAP SYMBOL
- MAILBOX
- MONITORING WELL
- SIGN
- TREE
- CATCH BASIN
- CLEANOUT
- ELECTRIC BOX
- ELECTRIC METER
- FIRE HYDRANT
- GAS METER
- GAS VALVE
- LIGHT POLE
- MANHOLE (TYPE AS LABELED)
- IRRIGATION VALVE
- POWER POLE
- STANDPIPE
- WATER VALVE
- X 262.3 — SPOT ELEVATION
- BIT — BITUMINOUS
- CONC — CONCRETE
- CP — CONCRETE PAD
- LSA — LANDSCAPED AREA
- BOH — BUILDING OVERHANG
- BW — BOTTOM OF WALL
- EP — EDGE OF PAVEMENT
- BC — BITUMINOUS CURB
- CC — CONCRETE CURB
- GC — GRANITE CURB
- SG — SLOPED GRANITE CURB
- SYS — SINGLE YELLOW STRIPE
- DYS — DOUBLE YELLOW STRIPE
- EASEMENT LINE
- PROPERTY LINE
- RIGHT–OF–WAY LINE
- 322 — CONTOUR LINE
- FM — SANITARY FORCE MAIN
- CATV — CABLE TV MARK OUT LINE
- D — DRAINAGE MARK OUT LINE
- E — ELECTRIC MARK OUT LINE
- T — COMMUNICATION MARK OUT LINE
- G — GAS MARK OUT LINE
- S — SANITARY SEWER MARK OUT LINE
- W — WATER MARK OUT LINE
- ST — STEAM MARK OUT LINE
- UNK — UNKNOWN MARK OUT LINE
- R* — REFERENCE UTILITY LINE (TYPE AS NOTED) – PLOTTED FROM EXISTING MAPPING

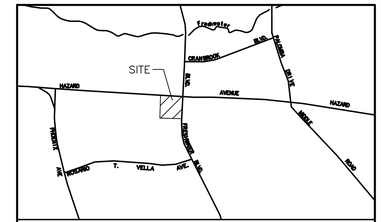


PROJECT LOCATION MAP
SCALE: 1" = 1000'
SOURCE: CONNECTICUT DEPARTMENT OF TRANSPORTATION

CT NAD 83

STATE OF CONNECTICUT — ANDREW G. IVES — NO. 70286 — LICENSED — LAND SURVEYOR

SCALE: 1 INCH = 30 FEET

| Date | Description | No. |
|---|---|---|

REVISIONS

"TO MY KNOWLEDGE AND BELIEF, THIS MAP IS SUBSTANTIALLY CORRECT AS NOTED HEREON."

5/11/2020

ANDREW G. IVES — DATE SIGNED
PROFESSIONAL LAND SURVEYOR
CT STATE LIC. NO. 70286


LANGAN
Langan CT, Inc.
555 Long Wharf Drive
New Haven, CT 06511
T: 203.562.5771 F: 203.789.6142 www.langan.com


Project
BROOKSIDE PLAZA
10-38 HAZARD AVE.
ENFIELD — CONNECTICUT

Drawing Title
# PARTIAL BOUNDARY & TOPOGRAPHIC SURVEY

Project No. 140161101
Date MAY 11, 2020
Drawn By JRL
Checked By AGI
Drawing No. VT401
Sheet 1 of 1

LANGAN
PROJECT NO. 140161101

© 2020 Langan

# GENERAL NOTES

1. ALL TOPOGRAPHIC, PROPERTY LINE, AND UTILITY INFORMATION TAKEN FROM PLANS ENTITLED "PARTIAL BOUNDARY & TOPOGRAPHIC SURVEY," PREPARED BY LANGAN, DATED 05/11/2020, AND "ALTA/ACSM LAND TITLE SURVEY," PREPARED BY F. A. HESKETH & ASSOCIATES, INC., DATED 06/22/2015 AND LAST REVISED 03/09/2016.
2. ALL PROPOSED DISTURBANCE IS NOT LOCATED WITHIN THE AQUIFER PROTECTION AREA.
3. ALL PROPOSED DISTURBANCE IS WITHIN ZONE X (UNSHADED) – AREA DETERMINED TO BE OUTSIDE THE 0.2% ANNUAL CHANCE FLOOD.
4. PROPOSED SITE WORK IMPROVEMENTS SHALL CONFORM TO THE STANDARD DETAILS AND/OR SPECIFICATIONS OF THE TOWN OF ENFIELD. IN THE ABSENCE OF LOCAL STANDARDS, SITE WORK SHALL CONFORM TO THE REQUIREMENTS OF CONNECTICUT DEPARTMENT OF TRANSPORTATION.
5. THE CONTRACTOR IS RESPONSIBLE FOR CONTACTING TOWN OF ENFIELD WATER POLLUTION CONTROL PLANT (860–253–5246, LEAVE MESSAGE IF NO ANSWER) 24 HOURS IN ADVANCE OF ANY INSPECTIONS.
6. THE CONTRACTOR IS RESPONSIBLE FOR CONTACTING CALL BEFORE YOU DIG (800–922–4455, 811, WWW.CBYD.COM), EXCAVATION TEST HOLES, PERFORMING TEST BORINGS, AND PERFORMING WHATEVER ADDITIONAL INVESTIGATION NECESSARY TO PROTECT AND MAINTAIN ALL EXISTING UTILITIES TO REMAIN THROUGHOUT THE CONSTRUCTION PERIOD. ANY CONFLICTS BETWEEN EXISTING UTILITIES AND PROPOSED UTILITIES DISCOVERED DURING CONSTRUCTION SHALL BE PROMPTLY REPORTED TO THE PROJECT ENGINEER.
7. SEE ARCHITECTURAL DRAWINGS FOR LOCATIONS, DIMENSIONS AND DETAILS OF ALL DOORS AND WALLS ASSOCIATED WITH THE BUILDING.
8. ALL IMPROVEMENTS CONSTRUCTED IN THE STATE RIGHT–OF–WAY SHALL COMPLY WITH THE CONNECTICUT DEPARTMENT OF TRANSPORTATION STANDARDS.
9. ALL IMPROVEMENTS CONSTRUCTED IN THE TOWN PUBLIC RIGHT–OF–WAY SHALL COMPLY WITH THE TOWN OF ENFIELD STANDARDS.
10. FOR AREAS OUTSIDE THE PROPERTY LINES, REPAIR AND/OR REPLACE ALL DAMAGE DONE TO EXISTING ELEMENTS (SIDEWALKS, PAVING, LANDSCAPING, ETC) AS REQUIRED BY OWNER AND/OR GOVERNING AUTHORITY.
11. CONTRACTOR TO REPAIR/REPLACE ANY EXISTING SIDEWALK THAT IS DAMAGED PRIOR TO OR DURING CONSTRUCTION.
12. ALL SIGNS AND PAVEMENT MARKINGS SHALL CONFORM TO THE LATEST EDITION OF THE MUTCD AND CONNECTICUT DEPARTMENT OF TRANSPORTATION REGULATIONS.
13. ALL RADII ARE 5.0' EXCEPT WHERE NOTED.
14. CONTRACTOR SHALL PREVENT DUST, SEDIMENT AND DEBRIS FROM EXITING THE SITE AND SHALL BE RESPONSIBLE FOR CLEANUP, REPAIRS AND CORRECTIVE ACTION IF SUCH OCCURS. ADJOINING STREETS AND PROPERTIES TO BE KEPT FREE OF DEBRIS RESULTING FROM DEMOLITION AND SHALL BE CLEANED ON A DAILY BASIS OR AS NEEDED.
15. DUST CONTROL TREATMENTS SHALL BE APPLIED AS NECESSARY TO CONTROL AND REDUCE THE AMOUNT OF DUST WHICH MAY CAUSE OFF–SITE DAMAGE, BE A HEALTH HAZARD TO HUMANS, WILDLIFE AND PLANT LIFE, OR POSE A HAZARD TO TRAFFIC SAFETY.
16. ABBREVIATIONS:
    - ARCH. = ARCHITECTURAL
    - CONC. = CONCRETE
    - EX. = EXISTING
    - RCP = REINFORCED CONCRETE PIPE
    - LF = LINEAR FEET
    - CB = CATCH BASIN
    - CCB = CURB CATCH BASIN
    - TC = TOP OF CURB
    - BC = BOTTOM OF CURB
    - CO = CLEAN OUT
    - TF = TOP OF FRAME
    - INV = INVERT
    - PVC = POLYVINYL CHLORIDE PIPE
    - LA = LANDSCAPED AREA
    - TYP = TYPICAL
    - HP = HIGHPOINT
    - CLCB = CURBLESS CATCH BASIN
    - MH = MANHOLE
    - RL = ROOF LEADER
17. DOMESTIC AND FIRE PROTECTION WATER SERVICE, ELECTRICAL, TELECOM AND GAS SERVICE. CONTRACTOR SHALL COORDINATE INSTALLATION OF UTILITIES IN SUCH A MANNER AS TO AVOID CONFLICTS AND TO ENSURE PROPER DEPTHS ARE ACHIEVED AS WELL AS COORDINATING WITH THE UTILITY COMPANIES AS TO LOCATION OF AND SCHEDULING OF CONNECTIONS TO THEIR FACILITIES.
18. ALL SIDEWALKS SHALL SLOPE AWAY FROM BUILDING.
19. THE CONTRACTOR SHALL BE RESPONSIBLE FOR ALL PAVEMENT REPAIRS REQUIRED AS A RESULT OF ANY UTILITY WORK.

# GENERAL SITE NOTES

1. ALL TOPOGRAPHIC, PROPERTY LINE, AND UTILITY INFORMATION TAKEN FROM PLANS ENTITLED "PARTIAL BOUNDARY & TOPOGRAPHIC SURVEY," PREPARED BY LANGAN, DATED 05/11/2020, AND "ALTA/ACSM LAND TITLE SURVEY," PREPARED BY F. A. HESKETH & ASSOCIATES, INC., DATED 06/22/2015 AND LAST REVISED 03/09/2016.
2. THESE PLANS REPRESENT THE OVERALL SITEWORK IMPROVEMENTS REQUIRED FOR PROJECT CONSTRUCTION. THE CONTRACTOR SHALL FURNISH, INSTALL, TEST AND COMPLETE ALL WORK TO THE SATISFACTION OF THE ENGINEER AND OWNER IN ACCORDANCE WITH THE CONTRACT DOCUMENTS. THE CONTRACTOR SHALL BE SOLELY RESPONSIBLE FOR MEANS AND METHODS OF CONSTRUCTION; AS SUCH, THESE PLANS DO NOT COMPLETELY REPRESENT, NOR ARE THEY INTENDED TO REPRESENT, ALL SPECIFIC INSTRUCTIONS REQUIRED FOR SITEWORK CONSTRUCTION. THE CONTRACTOR SHALL BE RESPONSIBLE TO CONSTRUCT ALL IMPROVEMENTS DEPICTED ON THESE PLANS IN ACCORDANCE WITH ALL APPLICABLE RULES, REGULATIONS AND LAWS IN EFFECT AT THE TIME OF CONSTRUCTION.
3. THE CONTRACTOR SHALL ACCEPT THE SITE AS IS. THE CONTRACTOR SHALL ASSESS CONDITIONS, AND THE KIND, QUALITY AND QUANTITY OF WORK REQUIRED. THE OWNER MAKES NO GUARANTEE IN REGARD TO THE ACCURACY OF ANY AVAILABLE INFORMATION WHICH WAS OBTAINED DURING INVESTIGATIONS. THE CONTRACTOR SHALL MAKE A THOROUGH SITE INSPECTION IN ORDER TO FIELD CHECK EXISTING SITE CONDITIONS, CORRELATE CONDITIONS WITH THE DRAWINGS AND RESOLVE ANY POSSIBLE CONSTRUCTION CONFLICTS WITH THE OWNER AND ENGINEER PRIOR TO COMMENCEMENT OF WORK. THE CONTRACTOR SHALL MAKE ADDITIONAL TOPOGRAPHIC SURVEYS HE DEEMS NECESSARY, PROVIDED THEY ARE COORDINATED WITH THE OWNER. ANY CONDITIONS DETERMINED BY THE CONTRACTOR THAT DIFFER FROM THE INFORMATION SHOWN ON THE DRAWINGS THAT ARE NOT BROUGHT TO THE ATTENTION OF THE OWNER AND ENGINEER PRIOR TO THE START OF WORK SHALL NOT BE CONSIDERED GROUNDS FOR ADDITIONAL PAYMENT OR CHANGES TO THE CONTRACT DURATION, OR ANY OTHER CLAIMS AGAINST THE OWNER OR OWNER'S ENGINEER.
4. THE CONTRACTOR SHALL, WHEN THEY DEEM NECESSARY, PROVIDE WRITTEN REQUESTS FOR INFORMATION (RFIS) TO THE OWNER AND ENGINEER PRIOR TO THE CONSTRUCTION OF ANY SPECIFIC SITEWORK ITEM. THE (RFI) SHALL BE IN A FORM ACCEPTABLE TO OWNER AND ENGINEER AND SHALL ALLOW FOR A MINIMUM OF TWO WORK DAYS OR ADDITIONAL REASONABLE TIME FOR A WRITTEN REPLY. RFIS SHALL BE NUMBERED CONSECUTIVELY BY DATE SUBMITTED. THE CONTRACTOR SHALL BE SOLELY RESPONSIBLE FOR SITEWORK ITEMS CONSTRUCTED DIFFERENTLY THAN INTENDED OR AS DEPICTED ON THE PLANS.
5. INFORMATION RELATED TO ELEVATIONS AND PROPOSED UTILITIES (SUCH AS ROADWAY GRADES, INVERT ELEVATIONS, RIM ELEVATIONS, GRATE ELEVATIONS, BUILDING FINISHED FLOOR ELEVATIONS, ETC.) MAY BE FOUND IN MORE THAN ONE LOCATION IN THE CONTRACT DOCUMENTS. THE CONTRACTOR SHALL SUFFICIENTLY REVIEW ALL PLANS, PROFILES AND ANY OTHER INFORMATION IN THE CONTRACT DOCUMENTS FOR CONSISTENCY PRIOR TO CONSTRUCTION. ANY INCONSISTENCIES OR DISCREPANCIES THAT ARE FOUND BY THE CONTRACTOR OR HIS ASSIGNS SHALL BE IMMEDIATELY BROUGHT TO THE ATTENTION OF THE OWNER AND ENGINEER IN WRITING, IN THE FORMAT OF AN RFI PRIOR TO CONSTRUCTION.
6. THERE ARE ADDITIONAL NOTES, SPECIFICATIONS AND REQUIREMENTS CONTAINED THROUGHOUT THE PLAN SET AS WELL AS REFERENCES TO SPECIFICATIONS FROM APPLICABLE GOVERNING AUTHORITIES AND INDUSTRY STANDARDS. IT IS THE CONTRACTOR'S RESPONSIBILITY TO OBTAIN, REVIEW AND ADHERE TO ALL THESE DOCUMENTS.
7. THE PROPERTY OWNER AND/OR HIS/HER AGENTS MUST MAINTAIN (REPAIR/REPLACE), WHEN NECESSARY, THE SILTATION CONTROL UNTIL ALL DEVELOPMENT ACTIVITY IS COMPLETED AND ALL DISTURBED AREAS ARE PERMANENTLY STABILIZED.
8. HANDICAP PARKING SHALL COMPLY WITH THE CT STATE BUILDING CODE REQUIREMENTS AS OF OCTOBER 2018 OR LAST REVISED.
9. SEE ARCHITECTURAL DRAWINGS FOR LOCATIONS, DIMENSIONS, AND DETAILS OF ALL DOORS, STAIRS, RAMPS, SIDEWALKS, CONCRETE PADS, WALLS, CANOPIES, EXTERIOR COLUMNS AND BOLLARDS ASSOCIATED WITH THE BUILDING.

# STANDARD TOWN NOTES

1. THE DEVELOPER OF A SUBDIVISION SHALL NOTIFY THE TOWN ENGINEER'S OFFICE 24 HOURS IN ADVANCE TO SCHEDULE INSPECTION OF SUB–BASE, GRAVEL, PAVEMENT, SIDEWALKS, DRAINAGE STRUCTURES AND PIPES, SANITARY SEWERS, AND MANHOLES. TELEPHONE 8 AM – 4 PM AT 253–6366. PRIVATE SITES WILL BE INSPECTED FOR SANITARY SEWERS AND ANY IMPROVEMENT TO BE TURNED OVER TO THE TOWN.
2. ALL SITE WORK SHALL BE CONSTRUCTED IN ACCORDANCE WITH THE TOWN OF ENFIELD SPECIFICATIONS AS OUTLINED IN SUBDIVISION REGULATIONS.
3. EROSION AND SEDIMENTATION CONTROLS SHALL BE INSTALLED IN ACCORDANCE WITH THE "EROSION AND SEDIMENT CONTROL HANDBOOK" PREPARED BY THE SOIL CONSERVATION SERVICE 2002.
4. ALL EXCAVATIONS WITHIN TOWN RIGHT–OF–WAY REQUIRE A STREET EXCAVATION PERMIT ISSUED BY THE ENGINEERING DEPARTMENT.
5. NO SITE IMPROVEMENTS SUCH AS DRAINAGE, SANITARY SEWERS, SIDEWALKS, EXCAVATIONS, FILLING, PAVEMENT OPTIONS, ETC., SHALL COMMENCE UNTIL THE SITE ENGINEERING BOND, AS REQUIRED BY THE ENFIELD PLANNING AND ZONING COMMISSION IS POSTED WITH THE TOWN OF ENFIELD.
6. NO STUMPS TO BE BURIED ON SITE.
7. PRE–CONSTRUCTION CONFERENCE FOR CONSTRUCTION OF A SUBDIVISION ONLY, SHALL INCLUDE THE TOWN ENGINEER OR HIS AGENT. NOTIFICATION OF CONFERENCE SHALL BE 48 HOURS IN ADVANCE.
8. THE DEVELOPER SHALL HIRE A REGISTERED PROFESSIONAL ENGINEER TO INSPECT THE SITE DURING CONSTRUCTION. TO ENSURE THE WORK IS CONSTRUCTED IN ACCORDANCE WITH THE APPROVED PLANS, THE ENGINEER WILL BE REQUIRED TO CERTIFY ON AN AS–BUILT PLAN THAT THE PROJECT WAS CONSTRUCTED IN ACCORDANCE WITH THE APPROVED PLANS AND ALL MATERIALS WERE PLACED IN ACCORDANCE WITH THE SITE PLANS AND SPECIFICATIONS, PRIOR TO ISSUANCE OF A CERTIFICATE OF OCCUPANCY.

# CONTRACTOR NOTES

1. THE WORK TO BE PERFORMED IS AS SHOWN ON THE DRAWINGS. THE CONTRACTOR IS RESPONSIBLE FOR MEANS AND METHODS OF CONSTRUCTION; AS SUCH, THESE PLANS MAY NOT COMPLETELY REPRESENT ALL SPECIFIC DETAILS OF INSTALLATION REQUIRED FOR CONSTRUCTION. CONTRACTOR IS RESPONSIBLE TO PROVIDE ALL IMPROVEMENTS REQUIRED TO ACHIEVE CONSTRUCTION DEPICTED ON THESE PLANS.
2. THE CONTRACTOR SHALL PROVIDE WRITTEN REQUESTS FOR INFORMATION TO THE OWNER AND OWNER'S ENGINEER PRIOR TO THE CONSTRUCTION OF ANY SPECIFIC SITEWORK ITEM IF ANY SITEWORK ITEM DEPICTED ON THE PLANS WARRANTS ADDITIONAL ENGINEERING INFORMATION REQUIRED FOR CONSTRUCTION AND IS NOT RELATED TO MEANS AND METHODS OF CONSTRUCTION. THE CONTRACTOR SHALL BE RESPONSIBLE FOR SITEWORK ITEMS INSTALLED DIFFERENTLY THAN INTENDED AS DEPICTED ON THE PLANS IN THE ABSENCE OF SUBMITTING AND RECEIVING REVIEWS AND/OR DIRECTION ON WRITTEN REQUESTS FOR INFORMATION.
3. THE CONTRACTOR SHALL ACCEPT THE SITE AS IS. THE CONTRACTOR SHALL MAKE AND SHALL BE DEEMED TO HAVE MADE A THOROUGH SITE INSPECTION IN ORDER TO FIELD CHECK EXISTING SITE CONDITIONS, CORRELATE CONDITIONS WITH THE DRAWINGS AND RESOLVE ANY POSSIBLE CONSTRUCTION CONFLICTS WITH THE OWNER AND OWNER'S ENGINEER PRIOR TO COMMENCEMENT OF WORK. THIS INCLUDES A TOPOGRAPHIC SURVEY OF ANY AREAS THE CONTRACTOR REQUIRES ADDITIONAL TOPOGRAPHIC INFORMATION. ANY CONDITIONS THAT DIFFER FROM THE EXISTING CONDITIONS SHOWN ON THE DRAWINGS THAT ARE NOT BROUGHT TO THE ATTENTION OF THE OWNER AND OWNER'S ENGINEER PRIOR TO THE START OF WORK SHALL NOT BE CONSIDERED GROUNDS FOR A CHANGE ORDER.
4. IT IS SPECIFICALLY NOTED THAT INFORMATION RELATED TO ELEVATIONS AND PROPOSED UTILITIES (SUCH AS ROADWAY GRADES, INVERT ELEVATIONS, RIM ELEVATIONS, GRATE ELEVATIONS, BUILDING FINISHED FLOOR ELEVATIONS, ETC.) MAY BE FOUND IN MORE THAN ONE LOCATION ON THE DRAWINGS. CONTRACTOR SHALL REVIEW ALL PLANS, PROFILES AND ANY INFORMATION/DATA TABLES FOR CONSISTENCY PRIOR TO CONSTRUCTION. ANY INCONSISTENCIES OR DISCREPANCIES THAT ARE FOUND SHALL IMMEDIATELY BE BROUGHT TO THE ATTENTION OF THE OWNER'S ENGINEER IN WRITING REQUESTING CLARIFICATION PRIOR TO CONSTRUCTION.
5. CONTRACTOR SHALL NOTE THAT THERE ARE ADDITIONAL NOTES, SPECIFICATIONS AND REQUIREMENTS CONTAINED ON SHEETS THROUGHOUT THE PLAN SET AND AVAILABLE REFERENCES TO SPECIFICATIONS FROM APPLICABLE GOVERNING AUTHORITIES AND INDUSTRY STANDARDS. IT IS THE CONTRACTOR'S RESPONSIBILITY TO OBTAIN, REVIEW AND ADHERE TO ALL APPLICABLE REQUIREMENTS.
6. THE CONTRACTOR IS SPECIFICALLY CAUTIONED THAT THE LOCATION AND/OR ELEVATION OF EXISTING UTILITIES AS SHOWN ON THESE PLANS IS BASED ON RECORDS OF THE VARIOUS UTILITY COMPANIES, AND WHERE POSSIBLE, MEASUREMENTS TAKEN IN THE FIELD. THE INFORMATION IS NOT TO BE RELIED UPON AS BEING EXACT OR COMPLETE. THE CONTRACTOR MUST CONTACT "CALL BEFORE YOU DIG" @ 1–800–922–4455 FOR THE LOCATION AND MARKING OF ALL EXISTING UTILITIES PRIOR TO ANY EXCAVATION. IT SHALL BE THE RESPONSIBILITY OF THE CONTRACTOR TO RELOCATE ALL UTILITIES WHICH CONFLICT WITH THE PROPOSED IMPROVEMENTS SHOWN ON THE PLANS.
7. THE CONTRACTOR SHALL FIELD VERIFY ALL EXISTING CONDITIONS, UTILITY LOCATIONS, AND INVERTS PRIOR TO CONSTRUCTION. ANY CONDITIONS FOUND TO DIFFER FROM THOSE SHOWN BY THE DRAWINGS SHALL BE IMMEDIATELY BROUGHT TO THE ATTENTION OF THE ENGINEER.
8. CONTRACTOR SHALL REFER TO MEP AND ARCHITECTURAL PLANS AND SPECIFICATIONS FOR ACTUAL LOCATIONS OF ALL UTILITY ENTRANCES TO INCLUDE SANITARY SEWER LATERALS, DOMESTIC AND FIRE PROTECTION WATER SERVICE, ELECTRICAL, GAS, FIBER OPTIC, AND TELEPHONE SERVICE, ROOF DRAINS, AND ALL OTHER UTILITIES. CONTRACTOR SHALL COORDINATE INSTALLATION OF UTILITIES IN SUCH A MANNER AS TO AVOID CONFLICTS AND TO ENSURE PROPER DEPTHS ARE ACHIEVED AS WELL AS COORDINATING WITH THE REGULATORY AGENCY AS TO LOCATION OF AND SCHEDULING OF CONNECTIONS TO THEIR FACILITIES.
9. SEE ARCHITECTURAL DRAWINGS FOR LOCATIONS, DIMENSIONS, AND DETAILS OF ALL DOORS, STAIRS, RAMPS, SIDEWALKS, CONCRETE PADS, WALLS, CANOPIES, EXTERIOR COLUMNS AND BOLLARDS ASSOCIATED WITH THE BUILDING.
10. THE CONTRACTOR SHALL VISIT THE SITE AND VERIFY THE ELEVATION AND LOCATION OF ALL UTILITIES BY VARIOUS MEANS PRIOR TO BEGINNING ANY EXCAVATION. TEST PITS SHALL BE DUG AT ALL LOCATIONS WHERE THE PROPOSED SANITARY AND STORM PIPING WILL CROSS EXISTING UTILITIES AND THE HORIZONTAL AND VERTICAL LOCATIONS OF THE UTILITIES SHALL BE DETERMINED. THE CONTRACTOR SHALL CONTACT THE CIVIL ENGINEER IN THE EVENT OF ANY DISCOVERED OR UNFORESEEN CONFLICTS SO THAT AN APPROPRIATE MODIFICATION CAN BE MADE.
11. CONTRACTOR IS RESPONSIBLE FOR CONTACTING THE TOWN OF ENFIELD TO SECURE CONSTRUCTION PERMITS AND FOR PAYMENT OF FEES FOR STREET CUTS AND CONNECTIONS TO EXISTING UTILITIES.
12. THESE PLANS DETAIL SITE INSTALLED PIPES UP TO 5' FROM THE BUILDING FACE. REFER TO ARCHITECTURAL, STRUCTURAL AND MEP DRAWINGS FOR BUILDING CONNECTIONS. SITE CONTRACTOR SHALL SUPPLY AND INSTALL PIPE ADAPTERS AS NECESSARY AT BUILDING CONNECTION POINT OR AT EXISTING UTILITY OR PIPE CONNECTION POINT.
13. THE CONTRACTOR SHALL ENSURE THAT ALL UTILITY PROVIDERS AND GOVERNING AUTHORITY STANDARDS FOR MATERIALS AND CONSTRUCTION METHODS ARE MET. THE CONTRACTOR SHALL PERFORM PROPER COORDINATION WITH THE RESPECTIVE UTILITY PROVIDER.
14. THE CONTRACTOR SHALL RESTORE ANY UTILITY STRUCTURE, PIPE, UTILITY, PAVEMENT, CURBS, SIDEWALKS, DRAINAGE STRUCTURE, SWALE OR LANDSCAPED AREAS DISTURBED DURING CONSTRUCTION, TO THEIR ORIGINAL CONDITION OR BETTER TO THE SATISFACTION OF THE OWNER, TOWN OF ENFIELD AND STATE OF CONNECTICUT.

# ACCESSIBILITY NOTES

1. WALKWAYS ALONG ACCESSIBLE ROUTES NOT TO EXCEED 5% RUNNING SLOPE OR 2% CROSS SLOPE.
2. ALL ADA PARKING SPACES AND PASSENGER LOADING ZONES SHALL NOT EXCEED 2% IN ANY DIRECTION.
3. ALL ADA EGRESSES SHALL BE FLUSH WITH ADJOINING MATERIAL UNLESS NOTED OTHERWISE.
4. ALL RAMPS SHALL NOT EXCEED 1:12 RUNNING SLOPE AND 2% CROSS SLOPE.

# LEGEND

| | EXISTING | PROPOSED |
|---|---|---|
| PROPERTY LINE | | |
| ZONE BOUNDARY LINE | | |
| SAWCUT LINE | | |
| WETLAND LIMITS LINE | | |
| 100' WETLAND BUFFER LINE | | |
| LANDSCAPE BUFFER LINE | | |
| FRONT YARD SETBACK LINE | | |
| SOIL BOUNDARY LINE | | |
| BUILDING LINE | | |
| CANOPY | | |
| CURB LINE | | |
| DOOR LOCATION | | |
| TRAFFIC SIGN | | |
| SIGN DESIGNATION | | A |
| PARKING SPACE COUNT | | 9 |
| LIGHT POLE | | |
| CONCRETE SIDEWALK/PAD | | |
| SANITARY SEWER LINE | | |
| WATER LINE | W | UW |
| GAS LINE | G | UG |
| UNDERGROUND TELECOM | | UT |
| UNDERGROUND ELECTRIC | E | UE |
| TRANSFORMER | | T |
| GATE VALVE | | |
| GAS METER | | |
| UTILITY POLE | | |
| SANITARY/STORM MANHOLE | | |
| SANITARY CLEANOUT | | |
| STORM PIPE | | |
| CURBLESS CATCH BASIN | | |
| CATCH BASIN | | |
| CONTOUR | 137 | 139 |
| SPOT ELEVATION | x 139.67 | x 138.79 |
| LIMIT OF DISTURBANCE | | LOD |
| SILT FENCE | | |
| CONSTRUCTION FENCE | | |
| TEMPORARY STOCKPILE | | |
| HAYBALES | | |
| INLET PROTECTION | | |
| ANTI–TRACK PAD | | |

# GRADING & DRAINAGE NOTES

1. ALL PROPOSED STORM DRAINAGE PIPING TO UTILIZE WATER–TIGHT JOINTS.
2. LOCATIONS AND ELEVATIONS OF ROOF LEADERS SHOULD BE COORDINATED WITH ARCHITECTURAL & MEP DRAWINGS PRIOR TO CONSTRUCTION.
3. CLEANOUTS SHALL BE PROVIDED FLUSH TO GRADE AT ALL LOCATIONS OF ROOF DRAIN INTERSECTIONS, BENDS AND UPSTREAM ENDS.
4. ALL REQUIRED STORM LATERALS SERVICING THE BUILDINGS SHALL BE COORDINATED AND CONSTRUCTED TO WITHIN FIVE FEET OF EACH BUILDING LATERAL ENTRANCE LOCATION AT THE INVERTS NOTED. ANY NECESSARY EXTENSIONS, RELOCATIONS, OR CORRECTIONS WITHIN FIVE FEET OF THE BUILDING NECESSARY TO COMPLETE CONNECTION OF LATERALS TO THE BUILDINGS SHALL BE MADE BY THE BUILDING CONTRACTOR.
5. CONTRACTOR IS RESPONSIBLE FOR DETERMINING THE APPROPRIATE SIZES OF THE DRAINAGE STRUCTURES (CATCH BASINS, MANHOLES, YARD DRAINS, ETC.) TO ACCOMMODATE THE PIPING SHOWN.
6. STORM DRAINAGE PIPING INSTALLATION SHALL COMMENCE AT THE FURTHEST DOWNSTREAM POINT AND PROCEED UPSTREAM "IN THE DRY".
7. CONTRACTOR SHALL CONNECT ALL NEW ROOF DRAINS TO THE DRAINAGE SYSTEM. LOCATIONS AND ELEVATIONS OF ROOF LEADERS SHOULD BE COORDINATED WITH MEP AND ARCHITECTURAL DRAWINGS PRIOR TO CONSTRUCTION.
8. THE CONTRACTOR WILL BE REQUIRED TO CLEAN THE ENTIRE DRAINAGE SYSTEM OF ALL DEBRIS AND OBSTRUCTIONS BOTH DURING CONSTRUCTION AND AT THE END OF CONSTRUCTION PRIOR TO ACCEPTANCE. THIS SHALL INCLUDE, BUT NOT BE LIMITED TO, REMOVAL OF ALL FORMWORK FROM STRUCTURES, CONCRETE AND MORTAR DROPPINGS, CONSTRUCTION DEBRIS, AND DIRT. THE SYSTEM SHALL BE THOROUGHLY FLUSHED CLEAN AND THE CONTRACTOR SHALL FURNISH ALL NECESSARY HOSE, PUMPS, PIPE, AND OTHER EQUIPMENT THAT MAY BE REQUIRED FOR THIS PURPOSE. NO DEBRIS SHALL BE FLUSHED INTO EXISTING STORM DRAINS, WETLANDS, OR WATERCOURSES; ALL DEBRIS SHALL BE REMOVED FROM THE SYSTEM AND DISPOSED OF IN ACCORDANCE WITH ALL GOVERNING AGENCIES.
9. ALL MANHOLE COVERS, GRATES, INLETS, AND RIMS TO REMAIN SHALL BE ADJUSTED TO PROPOSED GRADE.
10. CONTRACTOR TO PROVIDE ALL FITTINGS AND BENDS NECESSARY TO ACCOMPLISH WORK.
11. WALL DRAINS SHALL CONNECT TO STORM DRAINAGE SYSTEM AS SHOWN ON WALL DESIGN DRAWINGS.

# UTILITY NOTES

1. THE CONTRACTOR IS SPECIFICALLY CAUTIONED THAT THE LOCATION AND/OR ELEVATION OF EXISTING UTILITIES AS SHOWN ON THESE PLANS IS BASED ON RECORDS OF THE VARIOUS UTILITY COMPANIES, AND WHERE POSSIBLE, MEASUREMENTS TAKEN IN THE FIELD. THE INFORMATION IS NOT TO BE RELIED UPON AS BEING EXACT OR COMPLETE. THE CONTRACTOR MUST CONTACT "CALL–BEFORE–YOU–DIG" @ 1–800–922–4455 FOR THE LOCATION AND MARKING OF ALL EXISTING UTILITIES PRIOR TO ANY EXCAVATION. IT SHALL BE THE RESPONSIBILITY OF THE CONTRACTOR TO RELOCATE ALL UTILITIES WHICH CONFLICT WITH THE PROPOSED IMPROVEMENTS SHOWN ON THE PLANS.
2. THE CONTRACTOR SHALL FIELD VERIFY ALL EXISTING CONDITIONS, UTILITY LOCATIONS, AND INVERTS PRIOR TO CONSTRUCTION. ANY CONDITIONS FOUND TO DIFFER FROM THOSE SHOWN BY THE DRAWINGS SHALL BE IMMEDIATELY BROUGHT TO THE ATTENTION OF THE ENGINEER.
3. CONTRACTOR SHALL REFER TO ARCHITECTURAL AND MEP PLANS AND SPECIFICATIONS FOR ACTUAL LOCATIONS OF ALL UTILITY ENTRANCES TO INCLUDE SANITARY SEWER LATERALS, DOMESTIC AND FIRE PROTECTION WATER SERVICE, ELECTRICAL, TELEPHONE AND GAS SERVICE, AND ALL OTHER UTILITIES. CONTRACTOR SHALL COORDINATE INSTALLATION OF UTILITIES IN SUCH A MANNER AS TO AVOID CONFLICTS AND TO ENSURE PROPER DEPTHS ARE ACHIEVED AS WELL AS COORDINATING WITH THE REGULATORY AGENCY AS TO LOCATION OF AND SCHEDULING OF CONNECTIONS TO THEIR FACILITIES.
4. THE CONTRACTOR SHALL BE RESPONSIBLE FOR NOTIFYING UTILITY COMPANIES 72 HOURS PRIOR TO BEGINNING OF EXCAVATION.
5. THE CONTRACTOR SHALL BE RESPONSIBLE FOR ALL PAVEMENT REPAIRS REQUIRED AS A RESULT OF ANY UTILITY WORK.
6. LOCATION OF SITE UTILITIES SHALL BE VERIFIED BY GENERAL CONTRACTOR THE PROPER UTILITY COMPANY PROVIDING SERVICE.
7. GENERAL CONTRACTOR WILL BE RESPONSIBLE FOR ALL TAP AND TIE–IN FEES REQUIRED, AS WELL AS COST OF UNDERGROUND SERVICE CONNECTIONS TO THE BUILDING.
8. DIMENSIONS SHOWN ARE TO THE CENTERLINE OF PIPE OR FITTING.
9. ALL TRENCHING, PIPE LAYING, AND BACKFILLING SHALL BE IN ACCORDANCE WITH FEDERAL OSHA REGULATIONS.
10. GENERAL CONTRACTOR SHALL HAVE APPROVAL OF ALL GOVERNING AGENCIES HAVING JURISDICTION OVER THE SYSTEM PRIOR TO INSTALLATION.

ELECTRIC, TELEPHONE, & GAS:

11. CONTRACTOR TO COORDINATE GAS MAIN, ELECTRIC, AND TELEPHONE INSTALLATION WITH THE APPROPRIATE UTILITY COMPANIES.
12. CONTRACTOR SHALL MAINTAIN A MINIMUM OF 30 INCHES OF COVER FOR ALL UNDERGROUND ELECTRIC, TELEPHONE AND GAS UTILITIES.

WATER & SANITARY:

13. ALL SANITARY SEWER PIPE TO BE PUSH–JOINT POLYVINYL CHLORIDE (PVC) PIPE SDR–35. ALL JOINTS BETWEEN PVC PIPE SECTIONS AND BETWEEN PIPE AND PRECAST MANHOLES SHALL HAVE WATER–TIGHT RUBBER GASKET CONNECTIONS. ALL PVC PIPES AND FITTINGS SHALL COMPLY WITH ASTM D3034–93. ALL MAINS SHALL BE TESTED FOR LEAKAGE IN ACCORDANCE WITH THE LOW PRESSURE AIR TEST METHOD.
14. WHERE THE SANITARY SEWER LINE PASSES LESS THAN 18" BELOW THE WATER LINE, PROVIDE CONCRETE ENCASEMENT. THE LENGTH OF THE ENCASEMENT TO BE INCREASED TO THE NEAREST JOINT.
15. WHERE THE SANITARY SEWER LINE PASSES ABOVE THE WATER LINES, ENCASE SEWER IN 6" THICK CONCRETE FOR A DISTANCE OF 10 FEET ON EACH SIDE OF THE CROSSING, OR SUBSTITUTE RUBBER GASKETED PRESSURE PIPE FOR THE PIPE BEING USED FOR THE SAME DISTANCE.
16. CONTRACTOR SHALL MAINTAIN A MINIMUM OF 4.5 FEET OF COVER FOR ALL WATER DISTRIBUTION PIPING.
17. ALL NEW WATER LINES SHALL BE PRESSURE TESTED AND LEAKAGE TESTED IN ACCORDANCE WITH THE LATEST EDITION OF AWWA STANDARD C600.
18. ALL NEW WATER MAINS SHALL BE DISINFECTED IN ACCORDANCE WITH AWWA STANDARD C651.
19. GRAVITY PIPING SHALL BE INSTALLED FROM DOWNSTREAM TO UPSTREAM, "IN THE DRY". THE CONTRACTOR IS ENCOURAGED TO BEGIN WORK AT THE MOST DOWNSTREAM POINT IN THE SYSTEM, ESPECIALLY WHEN THE NEW WORK WILL CONNECT TO AN EXISTING UTILITY DOWNSTREAM. IF THE CONTRACTOR CHOOSES NOT TO START AT THE FURTHEST DOWNSTREAM LOCATION, THEN HE IS RESPONSIBLE FOR VERIFYING THE EXACT LOCATION, ELEVATION, AND INVERT OF THE EXISTING UTILITY PRIOR TO STARTING ANY WORK AND VERIFYING THAT THE EXISTING LOCATION AND INVERT ALLOWS FOR THE CONSTRUCTION OF THE PROPOSED SYSTEM AS DESIGNED.

# DEMOLITION NOTES

GENERAL:

1. THE CONTRACTOR SHALL INSPECT THE SITE THOROUGHLY AND FIELD–VERIFY THE LOCATION AND DEPTH OF ALL EXISTING UTILITIES. SOME UNDERGROUND UTILITIES MAY BE LOCATED DIFFERENTLY THAN SHOWN ON THIS PLAN. IN ADDITION, THERE MAY BE EXISTING UNDERGROUND UTILITIES PRESENT THAT ARE NOT SHOWN ON THIS PLAN. ALL CONTRACTORS USING THESE PLANS FOR DEMOLITION OR CONSTRUCTION SHALL CONFIRM ALL UTILITIES IN THE FIELD TO ESTABLISH LOCATIONS, SIZES, MATERIALS, AND ELEVATIONS. ANY DISCREPANCIES SHALL IMMEDIATELY BE BROUGHT TO THE ATTENTION OF THE ENGINEER AND THE CONSTRUCTION MANAGER.
2. THE CONTRACTOR IS RESPONSIBLE FOR CONTACTING "CALL BEFORE YOU DIG," EXCAVATING THE HOLES, AND PREPARING ANY ADDITIONAL RESEARCH OR INVESTIGATIONS REQUIRED IN ORDER TO ENSURE THAT PROPOSED UTILITIES TO REMAIN ARE PROTECTED FROM DAMAGE DURING DEMOLITION. ANY DAMAGE TO EXISTING UTILITIES TO REMAIN IS REQUIRED TO BE REPAIRED BY THE CONTRACTOR.
3. THE CONTRACTOR SHALL NOTIFY AND OBTAIN ALL SHUTOFFS FOR ALL APPLICABLE UTILITIES PRIOR TO THE COMMENCEMENT OF DEMOLITION.
4. THE CONTRACTOR SHALL LOCATE/CONFIRM ALL DRAINAGE INFRASTRUCTURE AND MAINTAIN ADEQUATE STORM DRAINAGE THROUGHOUT CONSTRUCTION.
5. THE CONTRACTOR SHALL FIELD LOCATE AND PROPERLY DISCONNECT APPROPRIATE LATERALS TO LIVE MAINS PRIOR TO DEMOLITION AND IN ACCORDANCE WITH UTILITY COMPANY STANDARDS.
6. THE CONTRACTOR SHALL MAINTAIN THE SAFETY AND PROTECTION OF BOTH PEDESTRIANS AND MOTORISTS. IT IS THE CONTRACTOR'S RESPONSIBILITY TO TAKE ALL NECESSARY PRECAUTIONARY AND PROTECTIVE MEASURES, INCLUDING SIGNS, LIGHTS, BARRIERS, FENCING AND TRAFFIC FLAGMEN.
7. THE CONTRACTOR SHALL BE RESPONSIBLE FOR OBTAINING ALL NECESSARY DEMOLITION ASSOCIATED PERMITS.
8. CONTRACTOR TO PROTECT AND MAINTAIN ALL UTILITIES TO REMAIN UNTIL TEMPORARY OR PERMANENT NEW LINES ARE INSTALLED.

DEMOLITION:

9. THE CONTRACTOR SHALL REMOVE AND LEGALLY DISPOSE OF ALL STRUCTURES WITHIN THE PROJECT LIMITS INDICATED TO BE REMOVED.
10. THE CONTRACTOR SHALL INCLUDE IN HIS BID ALL TEMPORARY FACILITIES AND SERVICES NECESSARY TO SATISFY FEDERAL, STATE, & LOCAL REQUIREMENTS INCLUDING BUT NOT LIMITED TO BRACING, SHORING, PAVEMENT REPAIR, FENCING, PEDESTRIAN AND VEHICLE ACCESS, CONCRETE PADS, ETC.

# CURB TRANSITION NOTES

1. CURB RADII ARE 5' UNLESS OTHERWISE NOTED.
2. PROVIDE 4' MINIMUM TRANSITION PIECE WHERE CURBING HEIGHT VARIES.

| Date | Description | No. |
|---|---|---|
| 09/21/20 | P&Z ADMINISTRATIVE APPROVAL/IWWA AGENT APPROVAL | 2 |
| 06/18/20 | P&Z SUBMISSION | 1 |

REVISIONS

STATE OF CONNECTICUT
No. 25760
LICENSED
PROFESSIONAL ENGINEER


LANGAN
Langan CT, Inc.
555 Long Wharf Drive
New Haven, CT 06511
T: 203.562.5771 F: 203.789.6142 www.langan.com


Project: BURLINGTON COAT FACTORY EXPANSION AT BROOKSIDE PLAZA
50 HAZARD AVENUE
ENFIELD CONNECTICUT

Drawing Title: GENERAL NOTES & MASTER LEGEND

Project No.: 140161101
Date: 5/22/2020
Drawn By: IJAB
Checked By: TSO

Drawing No.: CS002



LANGAN
PROJECT NO. 140161101


© 2020 Langan



Filename: \\langan.com\data\NHV\data1\140161101\Cadd Data - 140161101\SheetFiles\Civil_Burlington\140161101-CS002-0101.dwg Date: 9/18/2020 Time: 13:45 User: afedus Style Table: Langan.stb Layout: CS002

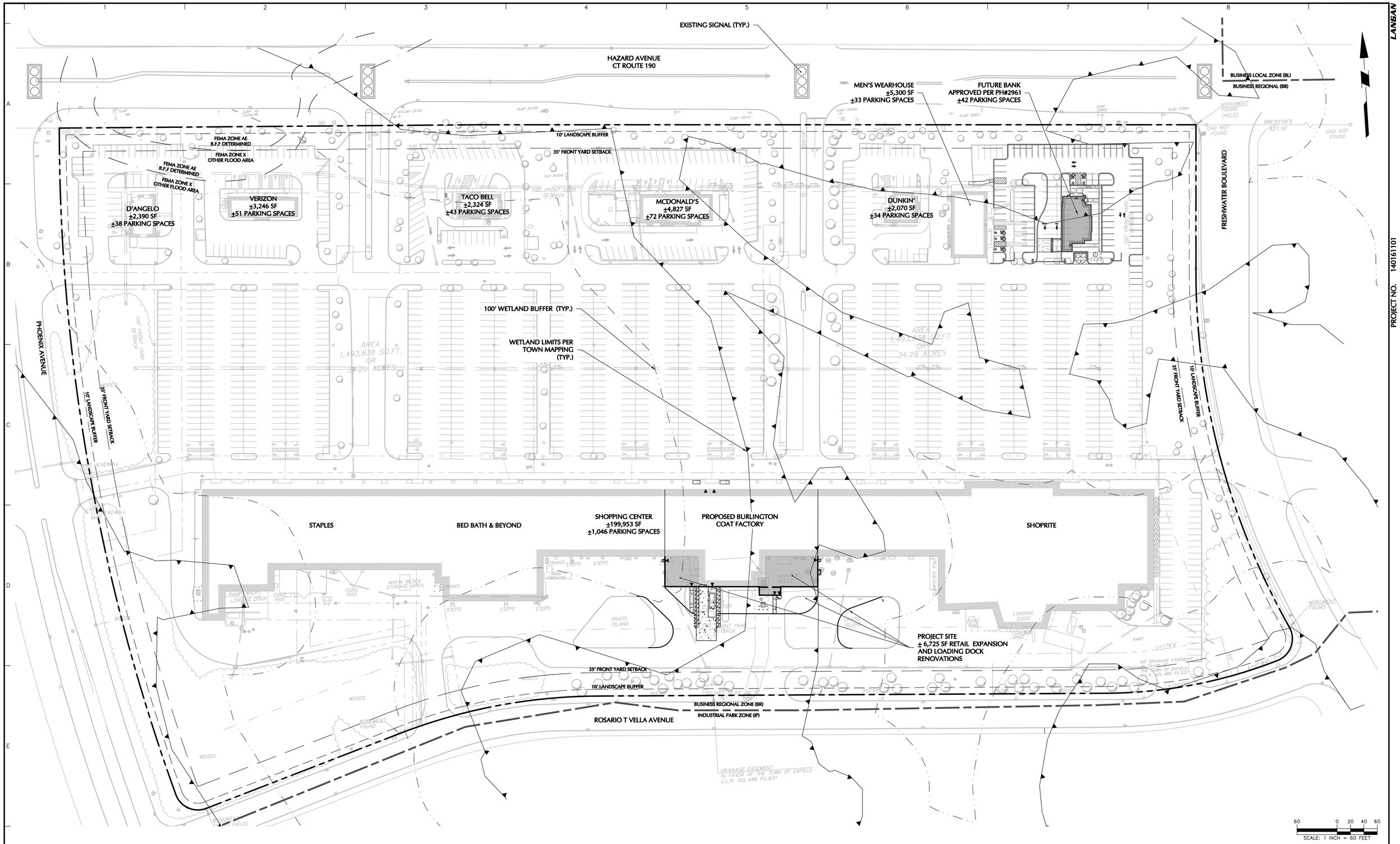


| Date | Description | No. |
|---|---|---|
| 09/21/20 | P&Z ADMINISTRATIVE APPROVAL/IWWA AGENT APPROVAL | 2 |
| 06/18/20 | P&Z SUBMISSION | 1 |

REVISIONS

STATE OF CONNECTICUT
TIMOTHY S. OBOROCK
No. 25760
LICENSED
PROFESSIONAL ENGINEER

**LANGAN**

Langan CT, Inc.
555 Long Wharf Drive
New Haven, CT 06511

T: 203.562.5771 F: 203.789.6142 www.langan.com

Project
BURLINGTON COAT FACTORY EXPANSION AT BROOKSIDE PLAZA
50 HAZARD AVENUE
ENFIELD CONNECTICUT

Drawing Title
OVERALL SITE PLAN

Project No. 140161101
Date 5/22/2020
Drawn By IJAB
Checked By TSO

Drawing No. CS100
Sheet 4 of 9

Filename: \\langan.com\data\NHV\data1\140161101\cadd data - 140161101\sheetfiles\Civil_Burlington\140161101-CS100-0101.dwg Date: 9/23/2020 Time: 12:05 User: afedus Style Table: Langan.stb Layout: CS100

LANGAN PROJECT NO. 140161101

© 2020 LANGAN

# ZONING CHART

REFERENCE: TOWN OF ENFIELD CT ZONING REGULATIONS (REVISED THROUGH APRIL 2019)

ZONE: BUSINESS REGIONAL DISTRICT (BR)
PROPOSED USE: RETAIL (SPECIAL PERMIT)

| ITEM | REQUIRED | EXISTING | PREVIOUSLY APPROVED[2] | PROPOSED | SECTION |
|---|---|---|---|---|---|
| MINIMUM LOT AREA | 5 ACRES | ±1,494,000 SF (±34.3 AC) | ±1,494,000 SF (±34.3 AC) | ±1,494,000 SF (±34.3 AC) | TABLE 5.10 |
| MINIMUM FRONTAGE | 250 FT | ±5,240 FT | ±5,240 FT | ±5,240 FT | TABLE 5.10 |
| MINIMUM FRONT YARD | 35 FT | ±100 FT | ±105 FT | ±105 FT | TABLE 5.10 |
| MINIMUM SIDE YARD | 30 FT | N/A | N/A | N/A | TABLE 5.10 |
| MINIMUM REAR YARD | 30 FT | N/A | N/A | N/A | TABLE 5.10 |
| MINIMUM FLOOR AREA | 80,000 SF | ±220,110 SF[1] | ±229,643 SF | ±230,065 SF[3] | TABLE 5.10 |
| MAXIMUM IMPERVIOUS COVERAGE | 66% | ±70.5% | ±70.1% | ±70.1%[4] | TABLE 5.10 |
| MAXIMUM BUILDING COVERAGE | 45% | ±14.7% | ±15.4% | ±15.4%[5] | TABLE 5.10 |
| MAXIMUM BUILDING HEIGHT | 72 FT | ±35 FT | ±35 FT | ±35 FT | TABLE 5.10 |

ZONING NOTES:

1. ±220,110 SF IS THE TOTAL AREA OF EXISTING BUILDINGS FROM PLAN TITLED ALTA/ACSM LAND TITLE SURVEY, DATED 06/22/15, WHICH DOES NOT REFLECT GROSS USABLE FLOOR AREA.
2. PREVIOUSLY APPROVED CONDITIONS REFER TO SPR#1829, SITE PLAN APPROVAL APPLICATION FOR A 6,300 SF EXPANSION FOR BURLINGTON COAT FACTORY AT 50 HAZARD AVENUE. CONSTRUCTION IS NOW UNDERWAY FOR ADDITIONAL PREVIOUS APPROVAL PH#2961, SPECIAL PERMIT APPLICATION FOR CHASE BANK AT 50 HAZARD AVENUE. SEE OVERALL SITE PLAN FOR LOCATION.
3. PROPOSED FLOOR AREA = 223,340 SF (EXISTING) + 6,725 SF (EXPANSION) = 230,065 SF.
4. SEE SITE PLAN FOR LOCATIONS OF NEW PERVIOUS AND IMPERVIOUS AREA. A NET REDUCTION IN IMPERVIOUS COVERAGE OF ±228 SF IS PROPOSED.
5. PROPOSED BUILDING COVERAGE = (230,065 SF/1,494,000 SF) X 100 = 15.4%.

# PARKING CHART

REFERENCE: TOWN OF ENFIELD CT ZONING REGULATIONS (REVISED THROUGH APRIL 2019)

ZONE: BUSINESS REGIONAL DISTRICT (BR)
PROPOSED USE: RETAIL (SPECIAL PERMIT)

| ITEM | REQUIRED | EXISTING | PREVIOUSLY APPROVED[2] | PROPOSED | SECTION |
|---|---|---|---|---|---|
| MINIMUM NUMBER OF SPACES | FOUR (4) SPACES PER 1,000 SF OF GROSS LEASABLE AREA (GLA)<br>(4 SPACES)(229,643 SF/ 1,000 SF) = 919 SPACES[1] | ±1,390 SPACES | ±1,358 SPACES | ±1,358 SPACES | SECTION 10.10.4.A. |

PARKING NOTES:

1. TOTAL AREA OF BUILDINGS WAS USED FOR THE PARKING CALCULATION AND DOES NOT REFLECT THE EXCEPTIONS TO THE GROSS USABLE FLOOR AREA DEFINITION. THE CALCULATION OF THE GROSS USABLE FLOOR AREA MAY RESULT IN A LOWER PARKING REQUIREMENT.
2. PREVIOUSLY APPROVED CONDITIONS REFER TO SPR#1829, SITE PLAN APPROVAL APPLICATION FOR A 6,300 SF EXPANSION FOR BURLINGTON COAT FACTORY AT 50 HAZARD AVENUE. CONSTRUCTION IS NOW UNDERWAY FOR ADDITIONAL PREVIOUS APPROVAL PH#2961, SPECIAL PERMIT APPLICATION FOR CHASE BANK AT 50 HAZARD AVENUE. SEE OVERALL SITE PLAN FOR LOCATION.

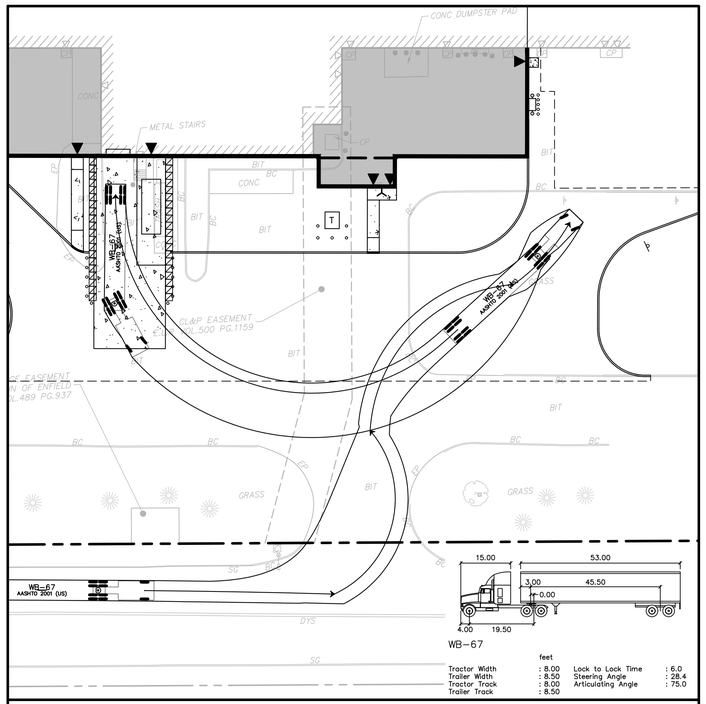


## WB-67 TRUCK TURNING MANEUVER

1"=30'

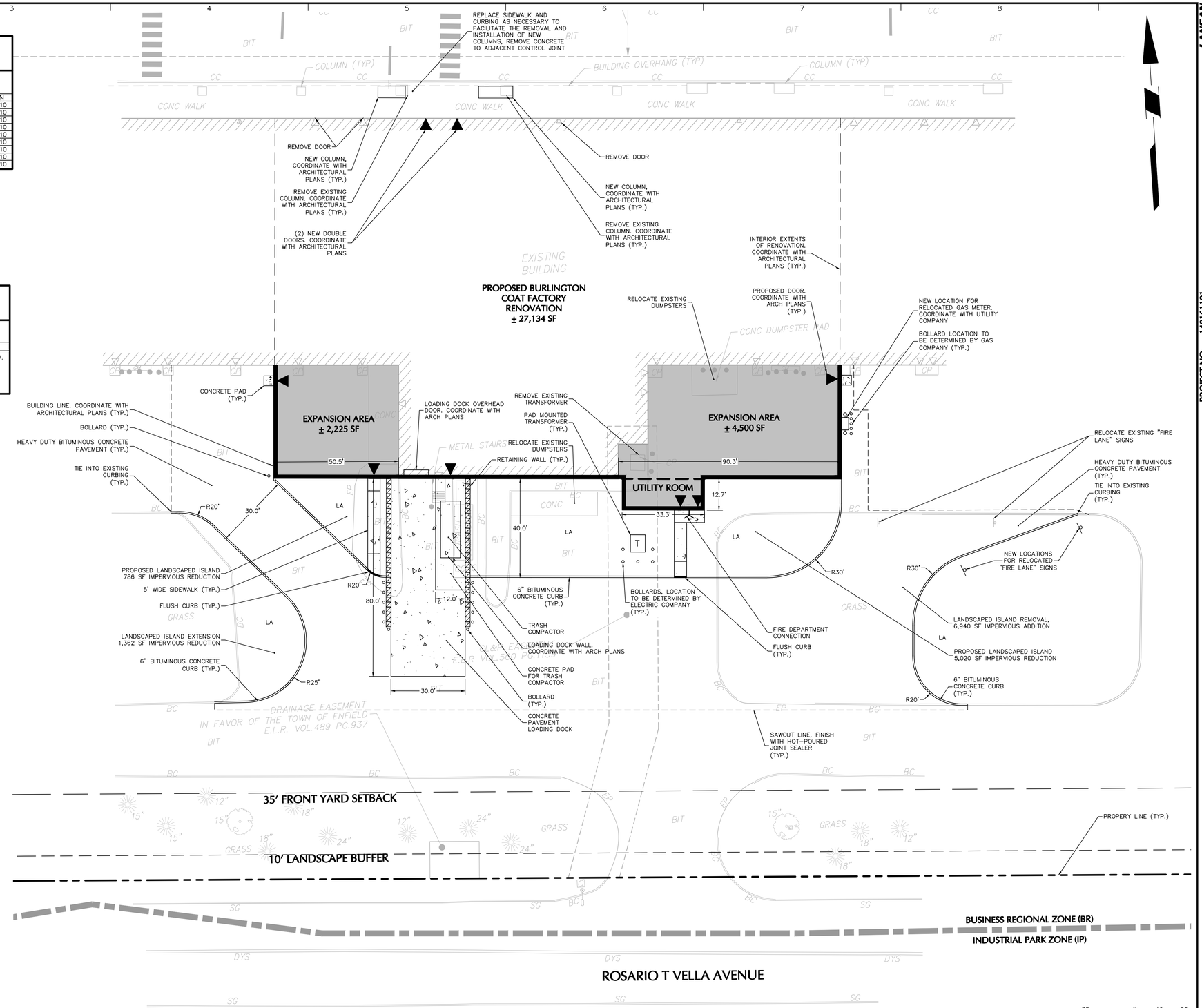


| Date | Description | No. |
|---|---|---|
| 09/21/20 | P&Z ADMINISTRATIVE APPROVAL/IWWA AGENT APPROVAL | 2 |
| 06/18/20 | P&Z SUBMISSION | 1 |

REVISIONS

STATE OF CONNECTICUT · TIMOTHY S. ONDERDONK · No. 25760 · LICENSED PROFESSIONAL ENGINEER


LANGAN
Langan CT, Inc.
555 Long Wharf Drive
New Haven, CT 06511
T: 203.562.5771 F: 203.789.6142 www.langan.com


Project: BURLINGTON COAT FACTORY EXPANSION AT BROOKSIDE PLAZA
50 HAZARD AVENUE
ENFIELD CONNECTICUT

Drawing Title: SITE PLAN

Project No. 140161101
Date 7/28/2020
Drawn By BP
Checked By TSO

Drawing No. CS101
Sheet 5 of 9

PROJECT NO. 140161101

LANGAN

© 2020 Langan

Filename: \\langan.com\data\NHV\data1\140161101\cadd data - 140161101\sheetfiles\Civil_Burlington\140161101-CS101-0101.dwg Date: 9/23/2020 Time: 11:05 User: afedus Style Table: Langan.stb Layout: CS101

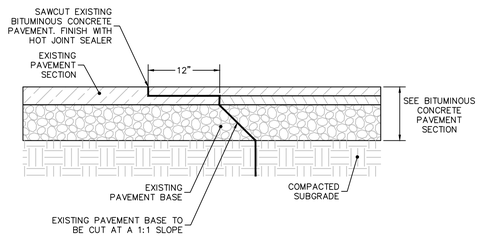


NOTES:
1. CONTRACTOR TO INSTALL TACK COAT ON ALL BUTT EDGES OF EXISTING PAVEMENT

## 1 SAWCUT PAVEMENT SECTION
N.T.S

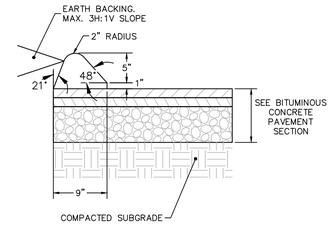


NOTES:
1. PROVIDE NOTCHED SEAT IN CURB AT LOCATIONS OF INTEGRAL BITUMINOUS CONCRETE SIDEWALK AND CURB

## 2 6" BITUMINOUS CONCRETE CURB
N.T.S

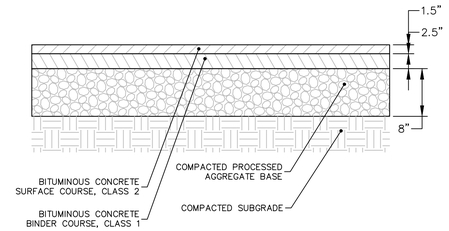


NOTES:
1. PROVIDE BITUMINOUS CONCRETE PAVEMENT AS INDICATED ON THE SITE PLAN.
2. BITUMINOUS CONCRETE SHALL CONFORM TO CT D.O.T. SPECIFICATIONS, FORM 817 SECTION 4.06, LATEST REVISION
3. PROCESSED AGGREGATE SHALL CONFORM TO CT D.O.T. SPECIFICATIONS, FORM 817 SECTION 3.04, LATEST REVISION

## 3 BITUMINOUS CONCRETE PAVEMENT SECTION - HEAVY DUTY
N.T.S

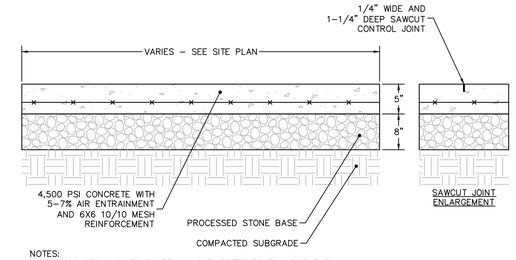


NOTES:
1. ALL CONTROL JOINTS TO BE SAWCUT, REFER TO ENLARGEMENT
2. SIDEWALKS TO COMPLY WITH CITY STANDARDS WHERE APPLICABLE.
3. EXPANSION AND CONTROL JOINTS SHALL BE INSTALLED PER LAYOUT AND DIMENSIONING PLANS. IF NOT SPECIFICALLY DETAILED MAXIMUM SPACING OF JOINTS SHALL BE AS FOLLOWS:
   EXPANSION – 20 FT.
   CONTROL – 5 FT.
4. CONTROL JOINTS SHALL BE SPACED EQUAL TO THE WIDTH BUT SHALL NOT EXCEED 6 FT. CARE SHALL BE TAKEN TO ASSURE UNIFORM GRADE, FREE OF SAGS AND SHORT GRADE CHANGES.
5. SURFACE TEXTURE SHALL BE A LIGHT BROOMING, TRANSVERSE TO THE LENGTH OF THE WALK.
6. CONTRACTOR TO PROVIDE 10'x10' MOCKUP SHOWING EXPANSION JOINTS, SAWCUT JOINTS, AND BROOM FINISH PRIOR TO INSTALLATION

## 4 ON-GRADE CONCRETE SIDEWALK
N.T.S

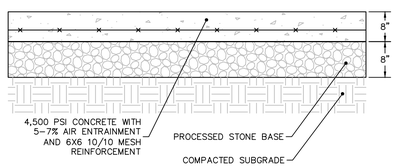


NOTES:
1. PRIOR TO ANY PAVING ACTIVITIES, THE SUBGRADE OR SUBBASE SHALL BE PROOF ROLLED.
2. PRIOR TO INSTALLATION OF PAVEMENT, THE SUBGRADE SHOULD BE SURFACE COMPACTED WITH A MINIMUM OF 4 PASSES WITH A VIBRATORY ROLLER HAVING A MINIMUM STATIC WEIGHT OF 10-TONS.
3. ANY SOFT AREAS SHALL BE REMOVED AND REPLACED WITH CLEAN, GRANULAR, FREE-DRAINING SOIL.
4. FILL SHALL BE PLACED IN LOOSE LIFTS NOT TO EXCEED 12-INCHES AND SHALL BE COMPACTED TO AT LEAST 95% OF ITS MAXIMUM DRY DENSITY AS DETERMINED BY ASTM D-1557.
5. TRANSVERSE AND LONGITUDINAL CONTROL JOINTS SHALL BE SAW CUT AT 15 FT MAXIMUM SPACING.
6. DOWEL BARS SHALL BE PLACED AT ALL JOINTS.
7. SURFACE TEXTURE SHALL BE A MEDIUM BROOM FINISH.

## 5 CONCRETE PAVEMENT
N.T.S

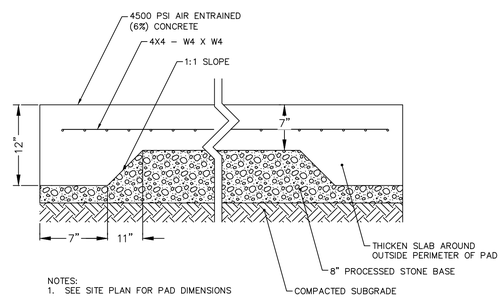


NOTES:
1. SEE SITE PLAN FOR PAD DIMENSIONS

## 6 CONCRETE PAD
N.T.S

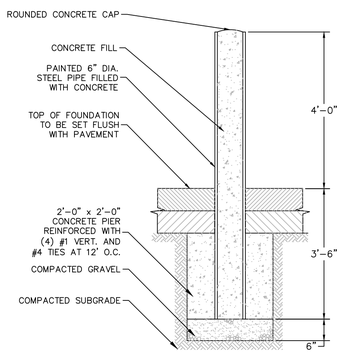


NOTES:
1. PAINT PRIME AND FINISH COATS TO BE COMPATIBLE WITH EXTERIOR METAL SURFACES. COLOR SHALL BE PROVIDED OWNER/ARCHITECT

## 7 BOLLARD
N.T.S

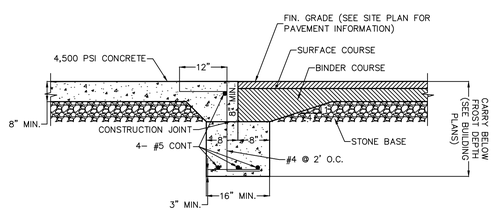


## 8 CONCRETE/ASPHALT JOINT DETAIL
N.T.S

| Date | Description | No. |
|---|---|---|
| 09/21/20 | P&Z ADMINISTRATIVE APPROVAL/IWWA AGENT APPROVAL | 2 |
| 06/18/20 | P&Z SUBMISSION | 1 |

REVISIONS

STATE OF CONNECTICUT — ANTHONY S. ONOFRIO — No. 25760 — LICENSED PROFESSIONAL ENGINEER


LANGAN
Langan CT, Inc.
555 Long Wharf Drive
New Haven, CT 06511
T: 203.562.5771 F: 203.789.6142 www.langan.com


Project: BURLINGTON COAT FACTORY EXPANSION AT BROOKSIDE PLAZA
50 HAZARD AVENUE
ENFIELD CONNECTICUT

Drawing Title: SITE DETAILS

Project No. 140161101
Date 5/22/2020
Drawn By BP
Checked By TSO

Drawing No. CS501

Sheet 6 of 9

© 2020 Langan

Filename: \\langan.com\data\NHV\data1\140161101\Cadd Data - 140161101\SheetFiles\Civil_Burlington\140161101-CS501-0101.dwg Date: 9/18/2020 Time: 13:46 User: afedus Style Table: Langan.stb Layout: CS501

LANGAN
PROJECT NO. 140161101

# LAWN SEED MIX:

1. LAWN SEED MIX: LESCO GRASS SEED – ALL PRO TRANSITION MIX (3 TURF–TYPE TALL–FESCUE GRASSES)

   NOTES:
   A) SEED RATE:
      1) NEW ESTABLISHMENT: SEED AT A RATE OF 6–8 LBS/1000 SQ FT
      2) RENOVATION: 20–50% EXISTING COVER: 5–7 LBS/1000 SQ FT
         50–75% EXISTING COVER: 4–6 LBS/1000 SQ FT

2. GENERAL SEED NOTES:

   A) FINAL SEED MIXTURES, RATES, AND SPECIES TO BE DETERMINED BASED ON PROJECT LANDSCAPE ARCHITECT REVIEW.
   B) SEEDING SHALL TAKE PLACE IN THE SPRING (APRIL 1 TO JUNE 15) OR THE FALL (SEPTEMBER 1 TO OCTOBER 15).
   C) ELIMINATE UNWANTED VEGETATION PRIOR TO SEEDING USING A GLYPHOSATE–BASED HERBICIDE PER MANUFACTURER'S SPECIFICATIONS.
   D) IT IS RECOMMENDED THAT CONTRACTOR INSTALL SEED MIXTURE USING A NO–TILL TRUAX–TYPE DRILL SEEDER WHERE APPLICABLE.
   E) THERE MUST BE CONTINUOUS SOIL MOISTURE FOR 4–6 WEEKS TO ALLOW FOR PROPER GERMINATION.

# LANDSCAPE MAINTENANCE NOTES

1. MAINTENANCE OPERATIONS BEFORE APPROVAL:

   A. PLANT CARE SHALL BEGIN IMMEDIATELY AFTER EACH PLANT IS SATISFACTORILY INSTALLED AND SHALL CONTINUE THROUGHOUT THE LIFE OF THE CONTRACT UNTIL FINAL ACCEPTANCE OF THE PROJECT.

   B. CARE SHALL INCLUDE, BUT NOT BE LIMITED TO, REPLACING MULCH THAT HAS BEEN DISPLACED BY EROSION OR OTHER MEANS, REPAIRING AND RESHAPING WATER RINGS OR SAUCERS, MAINTAINING STAKES AND GUYS AS ORIGINALLY INSTALLED, WATERING WHEN NEEDED OR DIRECTED, AND PERFORMING ANY OTHER WORK REQUIRED TO KEEP THE PLANTS IN A HEALTHY CONDITION.

   C. CONTRACTOR SHALL REMOVE AND REPLACE ALL DEAD, DEFECTIVE AND/OR REJECTED PLANTS AS REQUIRED BEFORE FINAL ACCEPTANCE.

2. MAINTENANCE DURING CONSTRUCTION:

   A. MAINTENANCE SHALL BEGIN IMMEDIATELY AFTER PLANTING. PLANTS SHALL BE WATERED, MULCHED, WEEDED, PRUNED, SPRAYED, FERTILIZED, CULTIVATED, AND OTHERWISE MAINTAINED AND PROTECTED UNTIL PROVISIONAL ACCEPTANCE. SETTLED PLANTS SHALL BE RESET TO PROPER GRADE AND POSITION, PLANTING SAUCER RESTORED AND DEAD MATERIAL REMOVED. STAKES AND WIRES SHALL BE TIGHTENED AND REPAIRED. DEFECTIVE WORK SHALL BE CORRECTED AS SOON AS POSSIBLE AFTER IT BECOMES APPARENT AND WEATHER AND SEASON PERMIT.

   B. IF A SUBSTANTIAL NUMBER OF PLANTS ARE SICKLY OR DEAD AT THE TIME OF INSPECTION, ACCEPTANCE SHALL NOT BE GRANTED AND THE CONTRACTOR'S RESPONSIBILITY FOR MAINTENANCE OF ALL PLANTS SHALL BE EXTENDED FROM THE TIME REPLACEMENTS ARE MADE OR EXISTING PLANTS ARE DEEMED ACCEPTABLE BY THE LANDSCAPE ARCHITECT.

   C. ALL REPLACEMENTS SHALL BE PLANTS OF THE SAME KIND AND SIZE SPECIFIED ON THE PLANT LIST OR THAT WHICH WAS TO REMAIN OR BE RELOCATED. THEY SHALL BE FURNISHED AND PLANTED AS SPECIFIED. THE COST SHALL BE BORNE BY THE CONTRACTOR. REPLACEMENTS RESULTING FROM REMOVAL, LOSS, OR DAMAGE DUE TO OCCUPANCY OF THE PROJECT IN ANY PART, VANDALISM, PHYSICAL DAMAGE BY ANIMALS, VEHICLES, ETC., AND LOSSES DUE TO CURTAILMENT OF WATER BY LOCAL AUTHORITIES SHALL BE APPROVED AND PAID FOR BY THE OWNER.

   D. PLANTS SHALL BE GUARANTEED FOR A PERIOD OF ONE YEAR AFTER INSPECTION AND PROVISIONAL ACCEPTANCE.

   E. AT THE END OF THE ESTABLISHMENT PERIOD, INSPECTION SHALL BE MADE AGAIN. ANY PLANT REQUIRED UNDER THIS CONTRACT THAT IS DEAD OR UNSATISFACTORY TO THE LANDSCAPE ARCHITECT OR OWNER SHALL BE REMOVED FROM THE SITE AND REPLACED DURING THE NORMAL PLANTING SEASON.

3. LAWN MAINTENANCE:

   A. BEGIN MAINTENANCE IMMEDIATELY AFTER EACH PORTION OF LAWN IS PLANTED AND CONTINUE FOR 8 WEEKS AFTER ALL LAWN PLANTING IS COMPLETED.

   B. WATER TO KEEP SURFACE SOIL MOIST, REPAIR WASHED OUT AREAS BY FILLING WITH TOPSOIL, LIMING, FERTILIZING AND RE–SEEDING; MOW TO 2 1/2 – 3 INCHES AFTER GRASS REACHES 3 1/2 INCHES IN HEIGHT, AND MOW FREQUENTLY ENOUGH TO KEEP GRASS FROM EXCEEDING 3 1/2 INCHES. WEED BY LOCAL SPOT APPLICATION OF SELECTIVE HERBICIDE ONLY AFTER GRASS IS WELL–ESTABLISHED.

# LAWN WATERING SCHEDULE

THE FOLLOWING WATERING SCHEDULE COVERS ROUGHLY 8 WEEKS TO ESTABLISH A HEALTHY STAND OF GRASS FROM SEED. THE CONTRACTOR SHALL BE OBLIGATED TO ENSURE A HEALTHY STAND OF GRASS AT THE END OF THE MAINTENANCE/BOND PERIOD. ANY BARE OR DEAD AREAS IN THE LAWN SHALL BE PREPARED, RESEEDED AND REESTABLISHED PRIOR TO THE END OF THE MAINTENANCE/BOND PERIOD AND TO THE SATISFACTION OF THE PROJECT LANDSCAPE ARCHITECT AND THE OWNER.

IMPORTANT ASPECTS TO ATTAINING AND SUSTAINING A HEALTHY STAND OF GRASS ARE THE INSTALLATION OF TOPSOIL, SEED BED PREPARATION, ATTAINING OPTIMAL pH FOR THE INTENDED PLANT SPECIES, FERTILIZING, MULCH COVERING, AND SUFFICIENT WATERING PER THESE NOTES AND/OR PROJECT SPECIFICATIONS.

1. SEEDING SHALL BE DONE DURING THE SEASONS SPECIFIED IN THE LAWN SEED MIX NOTES AND/OR PROJECT SPECIFICATIONS.

2. AFTER THE SEEDBED IS PREPARED, SEED IS INSTALLED, AND MULCH IS APPLIED, WATER LIGHTLY TO KEEP THE TOP 2 INCHES OF SOIL CONSISTENTLY MOIST, NOT SATURATED. AT NO TIME SHOULD WATER BE APPLIED TO THE POINT OF RUNOFF OR THE DISPLACEMENT OF SEED.

3. DEPENDING ON SOIL TEMPERATURES, IT MAY TAKE SEVERAL WEEKS FOR GERMINATION TO OCCUR. DIFFERENT SPECIES WITHIN THE MIX GERMINATE AT DIFFERENT TIMES AND THEREFORE CONTRACTOR SHOULD CONTINUE THE LIGHT WATERING, AS DESCRIBED ABOVE, UNTIL THERE IS AT LEAST 2 INCHES OF GROWTH THROUGHOUT.

4. AT THIS POINT, WATERING FREQUENCY MAY BE REDUCED TO EVERY 3 TO 5 DAYS. WATER SHALL BE APPLIED TO WET A 6 INCH MINIMUM SOIL DEPTH TO PROMOTE HEALTHY DEEP ROOTS.

5. BEGIN MOWING ONCE PER WEEK AFTER THE GRASS HAS REACHED 3 INCHES HEIGHT. MOW TO A HEIGHT OF NO LESS THAN 2–½ INCHES. AFTER 2 TO 3 WEEKS OF MOWING, CONTINUE TO WATER TO A 6 INCH MINIMUM SOIL DEPTH AS NECESSARY PER WEATHER CONDITIONS, AND SOIL MOISTURE SENSORS IF APPLICABLE.

# PLANTING SOIL SPECIFICATIONS

1. PLANTING SOIL, ALTERNATELY MAY BE REFERRED TO AS TOPSOIL, SHOULD BE FRIABLE, FERTILE, WELL DRAINED, FREE OF DEBRIS, TOXINS, TRASH AND STONES OVER 1/2" DIA., IT SHOULD HAVE A HIGH ORGANIC CONTENT SUITABLE TO SUSTAIN HEALTHY PLANT GROWTH AND SHOULD LOOK AESTHETICALLY PLEASING HAVING NO NOXIOUS ODORS.

2. PLANTING SOIL:

   REUSE SURFACE SOILS STOCKPILED ON SITE, VERIFYING COMPLIANCE WITH PLANTING SOIL AND TOPSOIL CRITERIA IN THIS SPECIFICATION THROUGH TESTING. CLEAN SURFACE SOIL OF ALL ROOTS, PLANTS, SOD, AND GRAVEL OVER 1" IN DIAMETER AND DELETERIOUS MATERIALS. IF ON–SITE SOILS ARE TO BE USED FOR PROPOSED PLANTING, THE CONTRACTOR SHALL DEMONSTRATE, THROUGH SOIL TESTING, THAT ON–SITE SOILS MEET THE SAME CRITERIA AS INDICATED IN NOTES PLANS AND SPECIFICATIONS.

   SUPPLEMENT WITH IMPORTED OR MANUFACTURED TOPSOIL FROM OFF SITE SOURCES WHEN TOPSOIL AND PLANTING SOIL QUANTITIES ARE INSUFFICIENT. OBTAIN SOIL DISPLACED FROM NATURALLY WELL–DRAINED SITES WHERE TOPSOIL OCCURS AT LEAST 4" DEEP. DO NOT OBTAIN FROM AGRICULTURAL LAND, BOGS, MARSHES OR CONTAMINATED SITES.

   CONTRACTOR SHALL TEST SOILS AND FURNISH SAMPLES UPON REQUEST. PACKAGED MATERIALS SHALL BE UNOPENED BAGS OR CONTAINERS, EACH BEARING A NAME, GUARANTEE, AND TRADEMARK OF THE PRODUCER, MATERIAL COMPOSITION, MANUFACTURER'S CERTIFIED ANALYSIS, AND THE WEIGHT OF THE MATERIALS. SOIL OR AMENDMENT MATERIALS SHALL BE STORED ON SITE TEMPORARILY IN STOCKPILES PRIOR TO PLACEMENT AND SHALL BE PROTECTED FROM INTRUSION OF CONTAMINANTS AND EROSION. AFTER MIXING, SOIL MATERIALS SHALL BE COVERED WITH A TARPAULIN UNTIL TIME OF ACTUAL USE.

   ALL PLANTING SOILS SHALL BE SUBMITTED FOR TESTING TO THE STATE COOPERATIVE EXTENSION SERVICE, OR APPROVED EQUAL, PRIOR TO DELIVERY TO THE SITE. CONTRACTOR SHALL FURNISH SOIL SAMPLES AND SOIL TEST RESULTS TO LANDSCAPE ARCHITECT OR OWNER AT A RATE OF ONE SAMPLE PER 500 CUBIC YARDS TO ENSURE CONSISTENCY ACROSS THE TOTAL VOLUME OF PLANTING SOIL REQUIRED. TEST RESULTS SHALL EVALUATE FOR ALL CRITERIA LISTED IN THIS SPECIFICATION. IF TESTING AGENCY DETERMINES THAT THE SOILS ARE DEFICIENT IN ANY MANNER AND MAY BE CORRECTED BY ADDING AMENDMENTS, THE CONTRACTOR SHALL FOLLOW STATED RECOMMENDATIONS FOR SOIL IMPROVEMENT AND FURNISH SUBMITTALS FOR ALL AMENDMENTS PRIOR TO DELIVERY OF SOIL TO THE PROJECT SITE.

   A. THE FOLLOWING TESTING SHOULD BE PERFORMED AND RESULTS GIVEN TO THE LANDSCAPE ARCHITECT FOR APPROVAL BEFORE INSTALLATION:
      a. PARTICLE SIZE ANALYSIS – LOAMY SAND: 60–75% SAND, 25–40% SILT, AND 5–15% CLAY.
      b. FERTILITY ANALYSIS: pH (5.5–6.5), SOLUBLE SALTS (LESS THAN 2 MMHO/CM), NITRATE, PHOSPHATE, POTASSIUM, CALCIUM AND MAGNESIUM
      c. ORGANIC MATTER CONTENT: 2.5–5% IN NATIVE SOILS; UP TO 10% IN AMENDED SOILS
      d. TOXIC SUBSTANCE ANALYSIS
      e. MATERIAL DRAINAGE RATE: 60% PASSING IN 2 MINUTES, 40% RETAINED
      f. NOT MORE THAN 1% OF MATERIAL SHALL BE RETAINED BY A #4 SIEVE

3. SOIL AMENDMENT FOR PLANT MATERIAL:
   IF SOIL ORGANIC CONTENT IS INADEQUATE, SOIL SHALL BE AMENDED WITH COMPOST OR ACCEPTABLE, WEED FREE, ORGANIC MATTER. ORGANIC AMENDMENT SHALL BE WELL COMPOSTED, PH RANGE OF 6–8; MOISTURE CONTENT 35–55% BY WEIGHT 100% PASSING THROUGH 1" SIEVE; SOLUBLE SALT CONTENT LESS THAN 0.5 MM HOS/CM; MEETING ALL APPLICABLE ENVIRONMENTAL CRITERIA FOR CLEAN FILL.

   A. ORGANIC MATTER AS A SOIL AMENDMENT: LEAF MOLD WITH 60–90% ORGANIC CONTENT BY WEIGHT. SHREDDED LEAF LITTER, COMPOSTED FOR A MINIMUM OF 1 YR. SHOULD BE FREE OF DEBRIS, STONES OVER 1/2", WOOD CHIPS OVER 1".

   B. SOIL IN BEDS AND PLANTING ISLANDS OTHER THAN BACKFILL MATERIAL AND TOPSOIL, SHOULD BE FRIABLE, WELL DRAINED, AND FREE OF DEBRIS, INCLUDING STONES AND TRASH.

   C. AMENDMENTS FOR BACK FILL IN TREE AND SHRUB PITS:
      a. GROUND LIMESTONE (WITH A MIN. OF 88% OF CALCIUM AND MAGNESIUM CARBONATES) USED PENDING RESULTS OF SOIL ANALYSIS.
         – BRING pH LEVELS TO 5.5 MIN. TO 6.5 FOR NON–ERICACEOUS PLANTS
         – BRING pH LEVELS TO 4.5 MIN. TO 5.5 FOR ERICACEOUS PLANTS
      b. TERRA–SORB BY 'PLANT HEALTH CARE' 800–421–9051 (SEE MANUFACTURER RECOMMENDATIONS) USED IN PLANTER BACKFILL MIXTURE WITH TREES AND SHRUBS.
      c. MYCOR–ROOT SAVER BY 'PLANT HEALTH CARE' 800–421–9051 (SEE MANUFACTURER RECOMMENDATIONS) USED IN BACKFILL MIXTURE WITH TREES.

4. WHERE PLANTING AREAS ARE PROPOSED FOR FORMER PAVED OR GRAVEL AREAS, BEDS SHALL BE EXCAVATED TO A MINIMUM 30" DEPTH AND, AT A MINIMUM, BE BACKFILLED WITH BOTTOM LAYER OF SANDY LOAM (ORGANIC CONTENT LESS THAN 2%) OVER WHICH TOPSOIL AND PLANTING SOILS WILL BE PLACED AT DEPTHS INDICATED IN PLANS, DETAILS AND NOTES.

5. CLEAN SOIL FILL IN LANDSCAPE AREAS:
   LANDSCAPE FILL MATERIAL, BELOW PLANTING SOILS, SHALL HAVE THE PHYSICAL PROPERTIES OF A SANDY LOAM WITH AN ORGANIC CONTENT OF LESS THAN 2% AND A PH BETWEEN 5 – 7.

6. SOIL PLACEMENT:
   A. CONTRACTOR TO PROVIDE SIX INCHES (6") MINIMUM DEPTH PLANTING SOIL LAYER IN LAWN AREAS, TWELVE INCHES (12") MINIMUM DEPTH PLANTING SOIL LAYER IN GROUNDCOVER AND PERENNIAL AREAS, EIGHTEEN INCHES (18") MINIMUM DEPTH PLANTING SOIL LAYER IN SHRUB AREAS, AND THIRTY–SIX INCHES (36") MINIMUM DEPTH PLANTING SOIL LAYER IN TREE PLANTING AREAS.

   B. SCARIFY AND/OR TILL COMPACTED SUBSOILS TO A MINIMUM DEPTH OF 6 INCHES. THOROUGHLY MIX A 6 INCH DEPTH LAYER OF PLANTING SOIL INTO THE SUBSOIL PRIOR TO PLACING PLANTING SOIL AT THE DEPTHS INDICATED ABOVE. PLANTING SOIL SHALL BE PLACED IN 12–18" LIFTS AND WATER THOROUGHLY BEFORE INSTALLING NEXT LIFT. REPEAT UNTIL DEPTHS AND FINISH GRADES HAVE BEEN ACHIEVED. NO SOILS SHALL BE PLACED IN A FROZEN OR MUDDY CONDITION.

   C. PLANTING SOIL PRESENT AT THE SITE, IF ANY, MAY BE USED TO SUPPLEMENT TOTAL AMOUNT REQUIRED. CONTRACTOR TO FURNISH AN ANALYSIS OF ON–SITE PLANTING SOIL UTILIZED IN ALL PLANTING AREAS.

7. SOIL CONDITIONING:
   A. ADJUST pH AND NUTRIENT LEVELS AS REQUIRED TO ENSURE AN ACCEPTABLE GROWING MEDIUM. LOWER pH USING ELEMENTAL SULFUR ONLY. PEAT MOSS OR COPPER SULFATE MAY NOT BE USED. GROUND LIMESTONE AS A SOIL AMENDMENT MATERIAL WILL ONLY BE USED PENDING RESULTS OF SOIL ANALYSIS. PROVIDE WITH MINIMUM 88% CALCIUM AND MAGNESIUM CARBONATES AND SHALL HAVE TOTAL 100% PASSING THE 10 MESH SIEVE, MINIMUM 90% PASSING 20 MESH SIEVE, AND MINIMUM 60% PASSING 100 MESH SIEVE.

   B. ALL DEBRIS EXPOSED FROM EXCAVATION AND CULTIVATION SHALL BE DISPOSED OF AT THE CONTRACTOR'S EXPENSE.

   C. SOIL MODIFICATIONS (PENDING RESULTS OF SOIL ANALYSIS):
      a. THOROUGHLY TILL ORGANIC MATTER (LEAF COMPOST) INTO THE TOP 6 TO 12 IN. OF MOST PLANTING SOILS TO IMPROVE THE SOIL'S ABILITY TO RETAIN WATER AND NUTRIENTS. ALL PRODUCTS SHOULD BE COMPOSTED TO A DARK COLOR AND BE FREE OF PIECES WITH IDENTIFIABLE LEAF OR WOOD STRUCTURE. AVOID MATERIAL WITH A pH HIGHER THAN 7.0. PEAT MOSS MAY NOT BE USED AS ORGANIC MATTER AMENDMENT.

      b. MODIFY HEAVY CLAY OR SILT (MORE THAN 40% CLAY OR SILT) BY ADDING COMPOSTED PINE BARK (UP TO 30% BY VOLUME) AND/OR GYPSUM. COARSE SAND MAY BE USED IF ENOUGH IS ADDED TO BRING THE SAND CONTENT TO MORE THAN 60% OF THE TOTAL MIX. IMPROVE DRAINAGE IN HEAVY SOILS BY PLANTING ON RAISED MOUNDS OR BEDS AND INCLUDING SUBSURFACE DRAINAGE LINES.

      c. MODIFY EXTREMELY SANDY SOILS (MORE THAN 85% SAND) BY ADDING ORGANIC MATTER AND/OR DRY, SHREDDED CLAY LOAM UP TO 30% OF THE TOTAL MIX.

GENERAL NOTE:

DUE TO GENERAL CONSTRUCTION ACTIVITIES AND ADJACENT SITE COMPACTION REQUIREMENTS, SUBGRADE SOILS WITHIN PROPOSED PLANTING AREAS TEND TO BECOME HIGHLY COMPACTED. IN ORDER TO CREATE A HEALTHY GROWTH MEDIUM TO ALLOW PROPOSED PLANTINGS TO ESTABLISH A VIGOROUS ROOT MASS, THIS SUBGRADE SOIL MUST UNDERGO A RESTORATION PROCESS. IN ADDITION, IMPORTED OR AMENDED EXISTING SOILS SHALL BE MIXED WITH SUBGRADE SOILS WHERE THEY MEET IN ORDER TO CREATE A TRANSITIONAL GRADIENT TO ALLOW FOR PROPER DRAINAGE.

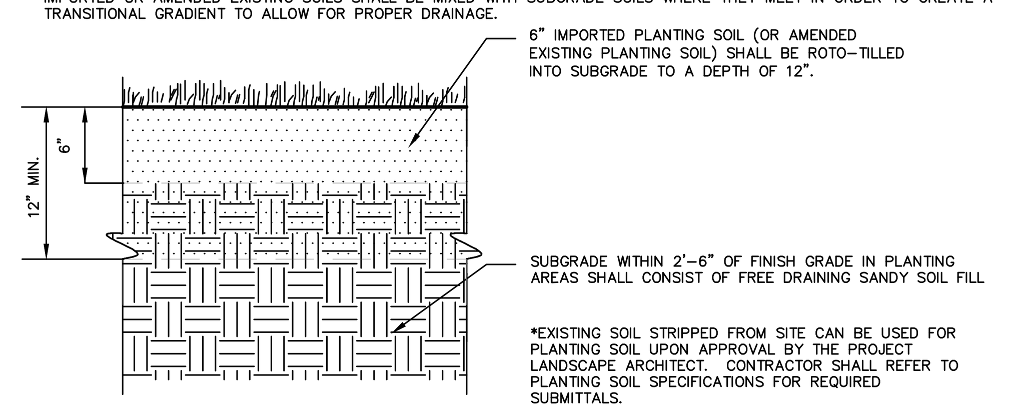


**PLANTING SOIL WITHIN AREAS OF CUT OR RAISED GRADE**

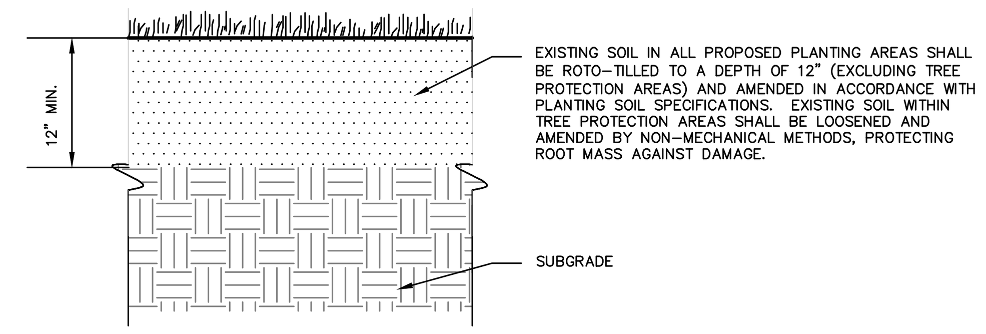


**PLANTING SOIL WITHIN AREAS OF UNCHANGED GRADE**

NOTES:

1. CONTRACTOR IS RESPONSIBLE TO SEND SAMPLES OF EXISTING SOILS INTENDED FOR USE IN PLANTING AREAS (1 PER 500 CY.) TO TESTING LABORATORY OR UNIVERSITY COOPERATIVE EXTENSION FOR TESTING. ALL TESTING COSTS ARE AT THE CONTRACTOR'S EXPENSE.

2. RECYCLED CRUSHED CONCRETE AND ASPHALT MILLINGS SHALL NOT BE PLACED WITHIN 2'–6" OF FINISH GRADE IN PROPOSED LANDSCAPE AREAS.

3. IMPORTED FILL SHALL CONTAIN NO CONTAMINATION IN EXCEEDENCE OF THE APPLICABLE STATE ENVIRONMENTAL STANDARDS AND MEET THE ENVIRONMENTAL REQUIREMENTS FOR THE PROJECT. THE CONTRACTOR SHALL PROVIDE DOCUMENTATION OF COMPLIANCE PRIOR TO DELIVERY OF ANY FILL TO THE SITE.

4. CONTRACTOR TO LIGHTLY COMPACT ALL PLACED PLANTING SOILS AND RAISE GRADES ACCORDINGLY TO ALLOW FOR FUTURE SETTLEMENT OF PLANTING SOILS (TYP.)

5. NO STONES, WOOD CHIPS, OR DEBRIS LARGER THAN 1/2" SHALL BE ACCEPTABLE WITHIN PLANTING AREAS.

## 1 PLANTING SOIL

NTS

| Date | Description | No. |
|---|---|---|
| 09/21/20 | P&Z ADMINISTRATIVE APPROVAL/IWWA AGENT APPROVAL | 2 |
| 06/18/20 | P&Z SUBMISSION | 1 |

REVISIONS

STATE OF CONNECTICUT · TIMOTHY S. ONDERKO · No. 25760 · LICENSED · PROFESSIONAL ENGINEER


LANGAN
Langan CT, Inc.
555 Long Wharf Drive
New Haven, CT 06511
T: 203.562.5771 F: 203.789.6142 www.langan.com


Project: BURLINGTON COAT FACTORY EXPANSION AT BROOKSIDE PLAZA
50 HAZARD AVENUE
ENFIELD CONNECTICUT

Drawing Title: SITE DETAILS II

Project No.: 140161101
Date: 06/18/2020
Drawn By: XW
Checked By: JA/MH
Drawing No.: CS502




© 2020 Langan



PROJECT NO. 140161101
Filename: \\langan.com\data\NHV\data1\140161101\Cadd Data - 140161101\SheetFiles\Civil_Burlington\140161101-CS502-0101.dwg Date: 9/18/2020 Time: 15:07 User: afedus Style Table: Langan.stb Layout: CS502

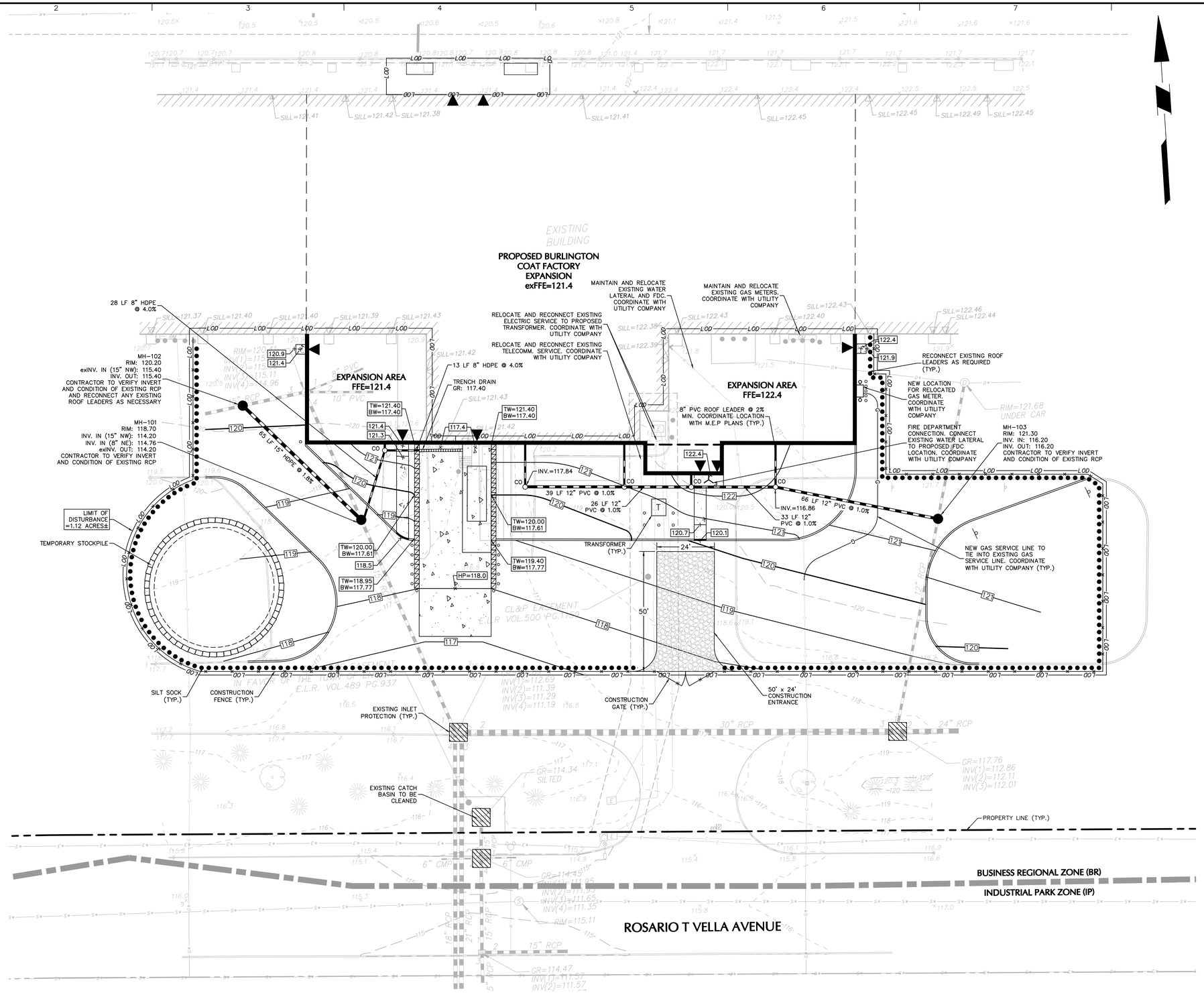


| Date | Description | No. |
|---|---|---|
| 09/21/20 | P&Z ADMINISTRATIVE APPROVAL/IWWA AGENT APPROVAL | 2 |
| 06/18/20 | P&Z SUBMISSION | 1 |

REVISIONS

STATE OF CONNECTICUT · MICHAEL S. CODERRE · No. 25760 · LICENSED PROFESSIONAL ENGINEER

**LANGAN**

Langan CT, Inc.
555 Long Wharf Drive
New Haven, CT 06511

T: 203.562.5771 F: 203.789.6142 www.langan.com

Project
**BURLINGTON COAT FACTORY EXPANSION AT BROOKSIDE PLAZA**
50 HAZARD AVENUE
ENFIELD CONNECTICUT

Drawing Title
**GRADING, DRAINAGE, UTILITY, AND EROSION CONTROL PLAN**

Project No. 140161101
Date 5/22/2020
Drawn By BP
Checked By TSO

Drawing No.
**CG101**
Sheet 7 of 9

PROJECT NO. 140161101

LANGAN

Filename: \\langan.com\data\NHV\data1\140161101\cadd data - 140161101\sheetfiles\Civil_Burlington\140161101-CG101-0101.dwg Date: 9/23/2020 Time: 11:36 User: afedus Style Table: Langan.stb Layout: CG101

© 2020 Langan

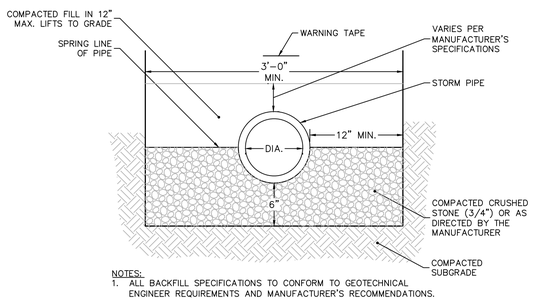


NOTES:
1. ALL BACKFILL SPECIFICATIONS TO CONFORM TO GEOTECHNICAL ENGINEER REQUIREMENTS AND MANUFACTURER'S RECOMMENDATIONS.

## 1 STORM PIPE BEDDING
N.T.S

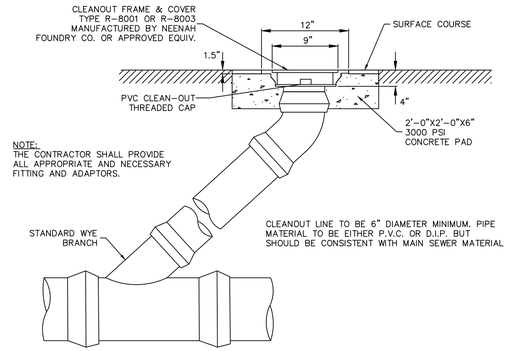


## 2 STORM CLEANOUT
N.T.S

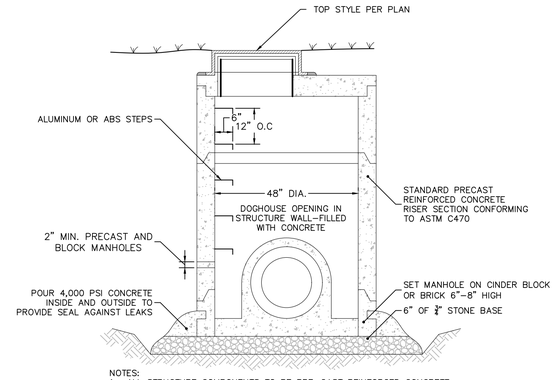


NOTES:
1. ALL STRUCTURE COMPONENTS TO BE PRE-CAST REINFORCED CONCRETE, ABLE TO WITHSTAND THE APPLIED EARTH LOADS WITH AN HS-20 TRUCK LOAD.
2. ALL JOINTS TO BE MORTARED.
3. STRUCTURE SHALL CONFORM TO ASTM C478.

## 3 DOGHOUSE STRUCTURE
N.T.S

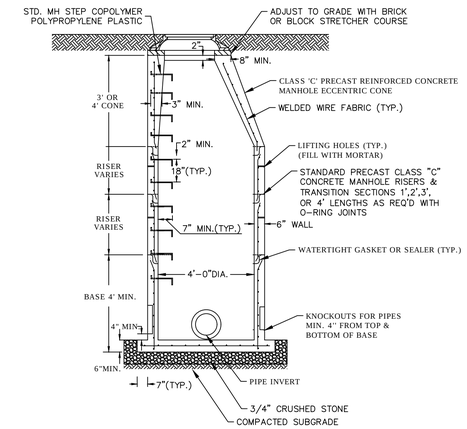


NOTES:
1. DIAMETER OF MANHOLE SHALL BE REVIEWED BY THE CONTRACTOR TO DETERMINE A LEGEND OF STANDARD MANHOLE DIMENSIONS WITH RESPECT TO PROPOSED PIPE SIZES, NUMBER AND GEOMETRY. OVER SIZE MANHOLES SHALL BE INSTALLED IF MINIMUM 6" WALL DIMENSION BETWEEN PIPES IS NOT PROVIDED.
2. MANHOLES SHALL BE STANDARD PRECAST CONCRETE UNITS AND SHALL BE DESIGNED AND CONSTRUCTED BY THE MANUFACTURER TO SUPPORT TRUCK H-20 LOADING.

## 4 STORM MANHOLE
N.T.S

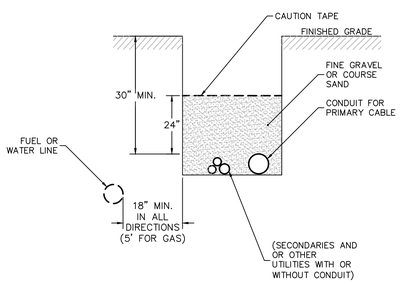


NOTES:
1. ALL DIRECT-BURIED CABLES SHALL BE INSTALLED AT A DEPTH OF AT LEAST 30 INCHES IN THE FOLLOWING ORDER:
   A. ENSURE THAT THE BOTTOM OF THE TRENCH IS WELL-TAMPED AND FREE OF ROCKS.
   B. INSTALL THE CONDUIT, GLUING ALL COUPLINGS.
   C. INSTALL SECONDARIES AND OTHER UTILITY CABLES OR CONDUITS LARGER THAN 2 INCHES IN MAXIMUM DIAMETER.
   D. BACKFILL WITH 12 INCHES CLEAN FILL NOT TO CONTAIN STONES LARGER THAN 2 INCHES IN MAXIMUM DIAMETER.
   E. INSTALL CABLE WARNING TAPE 12 INCHES OVER THE CONDUIT.
   F. FILL IN THE REMAINDER OF THE TRENCH WITH NATIVE BACKFILL.
2. THE TRENCH SHALL BE BACKFILLED IMMEDIATELY FOLLOWING PLACEMENT OF THE CONDUIT.
3. 1/4-INCH NYLON ROPE AND PLASTIC CONDUIT PLUG TO BE SUPPLIED AND INSTALLED BY CONTRACTOR.

## 5 ELECTRICAL UTILITY TRENCH
N.T.S

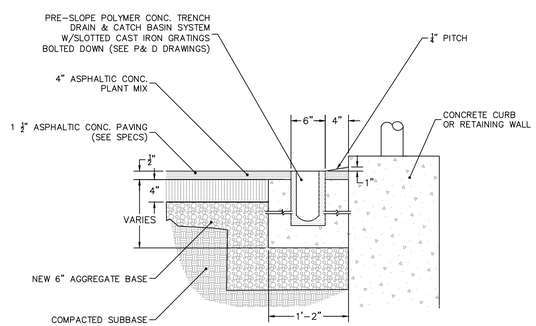


## 6 TRENCH DRAIN DETAIL
N.T.S

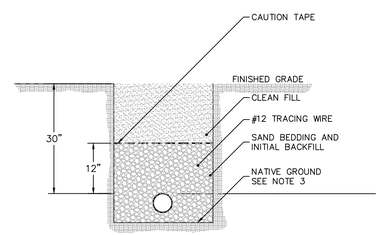


NOTES:
1. TRENCHES IN STABLE SOIL OVER 5 FT DEEP SHALL BE REINFORCED BY APPROVED OSHA METHODS
2. TRENCHES SHALL BE COMPACTED
3. IF NATIVE GROUND IS NOT SUITABLE, THE CONTRACTOR SHALL EXCAVATE TO AN ACCEPTABLE DEPTH AND INSTALL MATERIALS AS APPROVED BY ENGINEERS AND UTILITY COMPANY. CONTRACTOR TO PROVIDE EXCAVATION, BEDDING, SAND BACKFILL AND FIND BACKFILL. GAS COMPANY TO PROVIDE INSTALLATION OF ALL GAS PIPING AND SERVICES.

## 7 GAS MAIN TRENCH
N.T.S

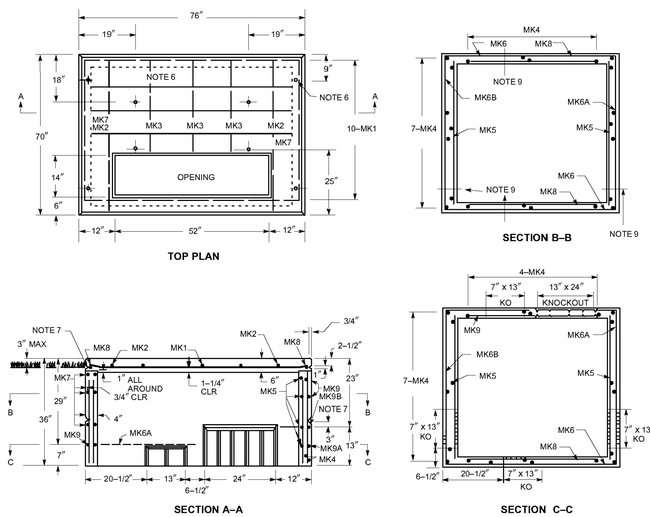


NOTES:
1. CONTRACTOR TO COORDINATE PAD SPECIFICATIONS WITH UTILITY PROVIDER.

## 8 TRANSFORMER PAD
N.T.S

| Date | Description | No. |
|---|---|---|
| 09/21/20 | P&Z ADMINISTRATIVE APPROVAL/IWWA AGENT APPROVAL | 2 |
| 06/18/20 | P&Z SUBMISSION | 1 |

REVISIONS

STATE OF CONNECTICUT KEITH S. OLDORF No. 25760 LICENSED PROFESSIONAL ENGINEER


LANGAN
Langan CT, Inc.
555 Long Wharf Drive
New Haven, CT 06511
T: 203.562.5771 F: 203.789.6142 www.langan.com


Project: BURLINGTON COAT FACTORY EXPANSION AT BROOKSIDE PLAZA
50 HAZARD AVENUE
ENFIELD CONNECTICUT

Drawing Title: GRADING, DRAINAGE, UTILITY, AND EROSION CONTROL DETAILS I

Project No. 140161101
Date 5/22/2020
Drawn By BP
Checked By TSO

Drawing No. CG501
Sheet 8 of 9

LANGAN
PROJECT NO. 140161101

© 2020 Langan

Filename: \\langan.com\data\NHV\data\140161101\Cadd Data - 140161101\SheetFiles\Civil_Burlington\140161101-CG501-0101.dwg Date: 9/18/2020 Time: 13:48 User: afedus Style Table: Langan.stb Layout: CG501

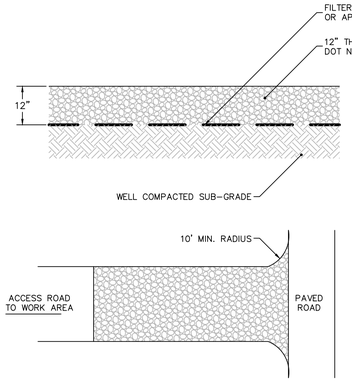


NOTE:
1. CONSTRUCTION PAD LOCATION TO BE SET BY CONTRACTOR AND LOCATED AS REQUIRED FOR CONSTRUCTION SEQUENCING.
2. SEE SOIL EROSION & SEDIMENT CONTROL PLAN, CE101, FOR DIMENSIONS.

## 1 CONSTRUCTION ENTRANCE

N.T.S

# SOIL EROSION-SEDIMENT CONTROL NOTES

PROPOSED DEVELOPMENT

1. CONSTRUCTION WILL INCLUDE EARTHWORK, CURBING, PAVING, UTILITY INSTALLATION, LANDSCAPING AND BUILDING CONSTRUCTION. ALL DEMOLITION DEBRIS AND SOIL REMOVAL RELATED TO CONSTRUCTION SHALL BE REMOVED AND DISPOSED OF IN ACCORDANCE WITH APPLICABLE STATE AND LOCAL LAWS GOVERNING SUCH ACTIVITIES.
2. THE DETAILED EROSION AND SEDIMENT CONTROL MEASURES ARE SHOWN ON DRAWING CE101. THE PROPOSED MEASURES HAVE BEEN DESIGNED TO PREVENT THE MIGRATION OF SOIL SEDIMENT FROM THE SITE.

SOIL EROSION AND SEDIMENT CONTROL NOTES

1. CONTRACTOR SHALL BE RESPONSIBLE FOR PHASING OF SOIL AND SEDIMENT CONTROL PRACTICES TO ENSURE SOIL AND SEDIMENT ARE PREVENTED FROM LEAVING THE DEVELOPMENT AREA THROUGHOUT DEMOLITION & CONSTRUCTION.
2. THE SOIL AND SEDIMENT CONTROL PRACTICES MUST BE INSTALLED IN ACCORDANCE WITH THE LOCAL GOVERNING AUTHORITY AND THE CONNECTICUT COUNCIL ON SOIL AND WATER CONSERVATION AND THE 2002 CONNECTICUT GUIDELINES FOR SOIL EROSION AND SEDIMENT CONTROL.
3. EROSION AND SEDIMENT CONTROL DEVICES MUST BE INSTALLED PRIOR TO START OF DEMOLITION AND CONSTRUCTION AND DISTURBANCE OF SITE CONTRIBUTORY DRAINAGE AREAS. THE OWNER OR ITS CONTRACTOR SHALL INSPECT, REPAIR AND REMOVE ALL SEDIMENT AND EROSION CONTROL DEVICES, AS INDICATED HEREIN. ALL EARTH CHANGES SHALL BE DESIGNED, CONSTRUCTED, AND COMPLETED IN SUCH A MANNER SO THAT THE EXPOSED AREA OF ANY DISTURBED LAND SHALL BE LIMITED TO THE SHORTEST POSSIBLE PERIOD OF TIME.
4. DISPOSAL OF COLLECTED SEDIMENT SHALL BE MADE TO AREA DESIGNATED BY THE OWNER'S SOIL ENGINEER.
5. FILTER FABRIC/SILT FENCE WILL BE INSTALLED ALONG THE TOE OF ALL CRITICAL CUT AND FILL SLOPES.
6. ALL TOPSOIL NOT TO BE USED FOR FINAL GRADING/LANDSCAPED AREAS SHALL BE REMOVED FROM THE SITE IMMEDIATELY, IN ACCORDANCE WITH APPLICABLE STATE AND LOCAL LAW. ALL TOPSOIL TO BE USED IN LANDSCAPED AREAS SHALL BE STORED/STOCKPILED IN ACCORDANCE WITH APPLICABLE STATE AND LOCAL LAW STANDARDS.
7. ALL AREAS WITHIN 500 FEET OF AN INHABITED DWELLING SHALL BE WETTED AS NECESSARY TO PROVIDE DUST CONTROL.
8. PAVEMENT BASE COURSE MUST BE PLACED IN ALL NEW ROADWAY AREAS UPON COMPLETION OF FINE GRADING.
9. THE CONTRACTOR IS RESPONSIBLE FOR ALL PAVED ROADWAYS, ON AND OFF-SITE, WHICH MUST BE KEPT FREE OF SITE GENERATED SEDIMENT AT ALL TIMES. DUST SHALL BE CONTROLLED BY SPRINKLING OR OTHER APPROVED METHOD.
10. ALL STORM DRAINAGE OUTLETS MUST BE STABILIZED, AS REQUIRED, BEFORE THE DISCHARGE POINTS BECOME OPERATIONAL.
11. SILT FENCES AND BARRIERS MUST BE CLEANED OR REPLACED PERIODICALLY TO REMOVE BUILT-UP SILT.
12. SEDIMENT TRAPS MUST BE CLEANED WHEN CAPACITY HAS BEEN REDUCED BY AN AVERAGE OF 2'-0" OVER ITS TOTAL AREA OR TO 70% OF ITS DESIGN VOLUMES, WHICHEVER OCCURS FIRST.
13. ALL EROSION AND SEDIMENT CONTROL DEVICES MUST BE INSPECTED ON A DAILY BASIS AND CLEANED IMMEDIATELY AFTER EACH STORM.
14. ANY TEMPORARY OR PERMANENT FACILITY DESIGNED FOR THE CONVEYANCE OF WATER AROUND, THROUGH, OR FROM THE EARTH CHANGE AREA SHALL BE DESIGNED TO LIMIT THE WATER FLOW TO A NON-EROSIVE VELOCITY.
15. THE CONTRACTOR SHALL CORRECT ANY OMISSIONS, ERRORS, OR FIELD OPERATIONS IMMEDIATELY AND IN ACCORDANCE WITH THE GUIDELINES FOR SOIL EROSION AND SEDIMENT CONTROL.
16. ANY CONVEYANCE OF THIS PROJECT PRIOR TO ITS COMPLETION WILL TRANSFER FULL RESPONSIBILITY FOR COMPLIANCE WITH THE CERTIFIED PLAN TO ANY SUBSEQUENT OWNERS.
17. SOIL EROSION AND SEDIMENT CONTROLS MUST BE INSPECTED BY THE ZONING ENFORCEMENT OFFICER BEFORE WORK MAY COMMENCE.
18. THE PROPERTY OWNER AND/OR HIS/HER AGENTS MUST MAINTAIN (REPAIR/REPLACE), WHEN NECESSARY, THE SILTATION CONTROL UNTIL ALL DEVELOPMENT ACTIVITY IS COMPLETED AND ALL DISTURBED AREAS ARE PERMANENTLY STABILIZED.

TEMPORARY STABILIZATION

SEDIMENT DISPOSAL AREAS AND TOPSOIL STOCKPILES NOT SCHEDULED FOR CONSTRUCTION ACTIVITIES WITHIN THIRTY (30) DAYS OF DISTURBANCE SHALL BE STABILIZED AS FOLLOWS:

A. SOIL AMENDMENTS AS NECESSARY.
B. ANNUAL RYE GRASS SEEDING APPLIED AT A RATE OF NOT LESS THAN 1 LB. PER 1,000 SF.
C. MULCH ALL NEWLY SEEDED AREAS WITHIN 80 LBS. OF SALT HAY OR SMALL GRAIN STRAW PER 1,000 SF.
D. WHEN DISTURBED AREAS ARE SCHEDULED FOR IMMEDIATE LANDSCAPING THEY MAY BE MULCHED AND SEEDED PER ITEM C ABOVE.

PERMANENT STABILIZATION

REFER TO PLANS FOR PERMANENT STABILIZATION METHODS + PROPOSED SEED MIXES.

A. PERMANENT VEGETATION IS TO BE SEEDED OR SODDED ON ALL DISTURBED LAND AREAS WITHIN SEVEN (7) DAYS AFTER FINAL GRADING. MULCH AS NECESSARY FOR SEED PROTECTION AND ESTABLISHMENT. AMEND SOIL AS NEEDED PRIOR TO PERMANENT SEEDING. WHEN IT IS NOT POSSIBLE TO PERMANENTLY STABILIZE A DISTURBED AREA AFTER COMPLETION OF AN EARTH CHANGE OR WHEN SIGNIFICANT EARTH CHANGE ACTIVITY CEASES, TEMPORARY SOIL EROSION CONTROL MEASURES SHALL BE IMPLEMENTED. ALL TEMPORARY SOIL EROSION CONTROL MEASURES SHALL BE MAINTAINED UNTIL PERMANENT SOIL EROSION CONTROL MEASURES SHALL BE IMPLEMENTED. ALL DISTURBED AREAS, STOCKPILES OF FILL OR EXCAVATED MATERIAL SHALL BE STABILIZED IN SUCH A MANNER AS NOT TO CAUSE UNREASONABLE HAZARD TO PERSONS OR PROPERTY.

B. MATERIALS SPECIFICATION: LAWN + MEADOW AREAS

(I) ANY SOIL HAVING A pH OF FOUR OR LESS CONTAINING IRON SULFIDES SHALL BE COVERED WITH A MINIMUM OF TWELVE INCHES OF SOIL HAVING A pH OF FIVE OR MORE PRIOR TO SEED BED PREPARATION.

C. MULCHING SHALL BE DONE AT THE RATE OF SEVENTY TO NINETY POUNDS (70-90 LBS) PER 1,000 SQUARE FEET WITH UNROTTED SALT HAY.

D. LIQUID MULCH BINDERS MUST BE USED TO ANCHOR SALT HAY, HAY OR STRAY MULCHES.

(I) APPLICATIONS SHOULD BE HEAVIER AT EDGES WHERE WIND CATCHES THE MULCH IN VALLEYS AND AT CREATED BANKS. REMAINDER OF AREA SHOULD BE UNIFORM IN APPEARANCE.

(II) USE ONE OF THE FOLLOWING: SYNTHETIC OR ORGANIC BINDERS, BINDERS SUCH AS CURASOL DCA-70, PETRO SET, TERRA TACH, HYDRO MULCH AND AEROSPRAY MAY BE USED AT RATES RECOMMENDED BY THE MANUFACTURER OF ANCHOR MULCH MATERIALS. BINDERS CONTAINING PETROLEUM PRODUCTS SHALL NOT BE USED.

NOTE: ALL NAMES GIVEN ABOVE ARE REGISTERED TRADE NAMES. THIS DOES NOT CONSTITUTE A RECOMMENDATION OF THESE TO THE EXCLUSION OF OTHER PRODUCTS.

D. FILL MATERIAL SHALL BE FREE FROM DEBRIS, PERISHABLE OR COMBUSTIBLE MATERIAL AND FROZEN OR WET EARTH OR STONES LARGER THAN THREE INCHES IN MAXIMUM DIMENSION.

E. CONSTRUCTION AREAS SHALL BE PERIODICALLY SPRAYED WITH WATER UNTIL THE SURFACE IS WET TO CONTROL THE GENERATION OF DUST.

F. ALL REVISIONS AFTER APPROVAL HAS BEEN GRANTED SHALL BE FORWARDED TO THE APPROPRIATE DISTRICT FOR REVIEW.

G. THE LOCAL GOVERNING AUTHORITY SHALL RECEIVE WRITTEN NOTIFICATION SEVENTY TWO HOURS BEFORE THE START OF ANY CONSTRUCTION.

H. SEEDBED PREPARATION:

(I) TOPSOIL SHOULD BE A MINIMUM OF SIX INCHES DEEP (LIGHTLY COMPACTED) BEFORE SEEDING.
(II) TOPSOIL SHALL BE TESTED PRIOR TO SEEDING.
(III) WORK SOIL AMENDMENTS INTO SOIL AS NECESSARY AS NEARLY AS PRACTICAL TO A DEPTH OF FOUR INCHES WITH A DISC, SPRINGTOOTH HARROW OR OTHER SUITABLE EQUIPMENT. THE FINAL HARROWING OR DISCING OPERATION SHOULD BE ON THE GENERAL CONTOUR. CONTINUE ALL CLAY OR SILTY SOIL AND COARSE SANDS SHOULD BE ROLLED TO FIRM THE SEED BED WHEREVER FEASIBLE.
(IV) REMOVE FROM THE SURFACE ALL STONES ONE INCH OR LARGER IN ANY DIMENSION. REMOVE ALL OTHER DEBRIS, SUCH AS WIRE, CABLE, TREE ROOTS, PIECES OF CONCRETE, CLODS, LUMPS, OR OTHER UNSUITABLE MATERIAL.
(V) INSPECT SEED BED JUST BEFORE SEEDING. IF TRAFFIC HAS LEFT SOIL COMPACT, THE AREA MUST BE RETILLED AND FIRMED AS ABOVE.

CONTINGENCY SOIL EROSION AND SEDIMENT CONTROL NARRATIVE

19. THE GENERAL CONTRACTOR WILL DESIGNATE PERSONNEL FOR 24 HOUR EMERGENCY RESPONSE IN THE EVENT OF SEVERE WEATHER AND INCREASED POTENTIAL FOR SEVERE EROSION.
20. THE GENERAL CONTRACTOR IS REQUIRED TO MAINTAIN ON SITE OR HAVE THE ABILITY TO RETRIEVE WITHIN 12 HOURS THE FOLLOWING MATERIALS IN THE EVENT THAT THERE ARE DEFICIENCIES IN THE SESC MEASURES:
    A. 25% OF THE INSTALLED LENGTH OF SILT FENCE
    B. EQUIVALENT TONNAGE OF STONE FOR STABILIZATION OF 2 STABILIZATION ENTRANCES. STONE COULD BE USED FOR SLOPE REPAIRS, ENERGY DISSIPATER ENHANCEMENTS, ETC.
    C. HEAVY EQUIPMENT CAPABLE OF TRENCHING/EXCAVATING LARGE AREAS TO DIVERT AND CONTROL RUNOFF IN A CONTROLLED MANNER.
    D. HAVE DESIGNATED A HYDRO-SEED CONTRACTOR CAPABLE OF RESPONDING TO THE SITE WITHIN 12 HOURS
21. ANY STUMP GRINDINGS OR WOOD CHIPS GENERATED ON-SITE SHOULD BE RETAINED FOR USE TO BACK UP SILT FENCES.

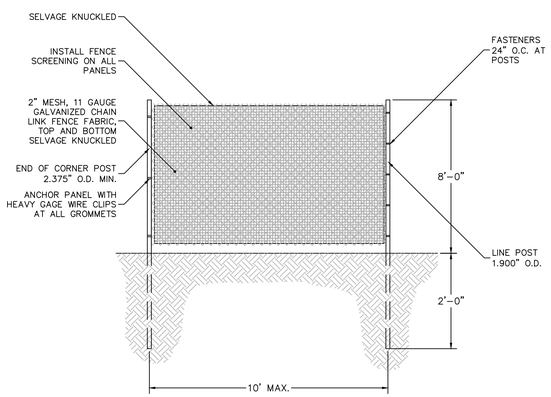


NOTES:
1. PIPE POSTS SHALL BE IMBEDDED INTO THE GROUND. PEDESTAL MOUNTED FENCING WILL ONLY BE ALLOWED AT AREAS APPROVED BY THE PROJECT MANAGER. WHEN ALLOWED, PROVIDE CONCRETE OR GALVANIZED-STEEL BASES FOR SUPPORTING POSTS. PROVIDE BLUE REINFORCED SCRIM SHEETING ON ALL FENCING.

## 2 TEMPORARY CONSTRUCTION FENCE

N.T.S

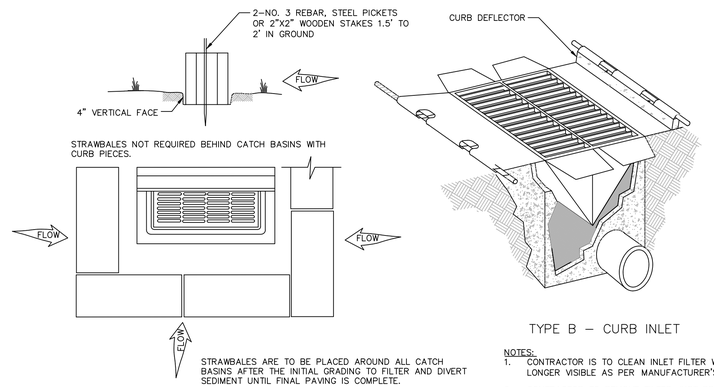


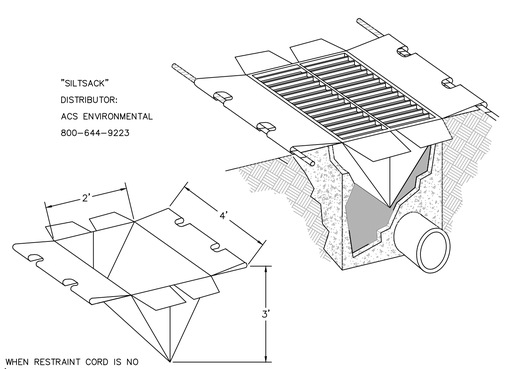


NOTES:
1. CONTRACTOR IS TO CLEAN INLET FILTER WHEN RESTRAINT CORD IS NO LONGER VISIBLE AS PER MANUFACTURER'S SPECIFICATIONS.
2. CONTRACTOR TO REMOVE FILTER JUST PRIOR TO PAVING.

## 3 INLET PROTECTION

N.T.S

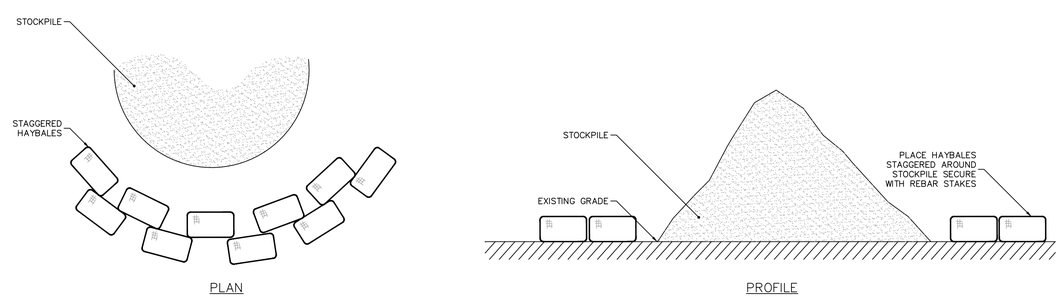


## 4 TEMPORARY STOCKPILE

N.T.S

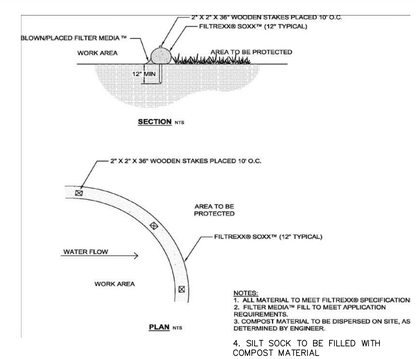


NOTES:
1. ALL MATERIAL TO MEET FILTREXX® SPECIFICATION
2. FILTER MEDIA™ FILL TO MEET APPLICATION REQUIREMENTS.
3. COMPOST MATERIAL TO BE DISPERSED ON SITE, AS DETERMINED BY ENGINEER.
4. SILT SOCK TO BE FILLED WITH COMPOST MATERIAL

## 5 SILT SOCK

N.T.S

| Date | Description | No. |
|---|---|---|
| 09/21/20 | P&Z ADMINISTRATIVE APPROVAL/IWWA AGENT APPROVAL | 2 |
| 06/18/20 | P&Z SUBMISSION | 1 |

REVISIONS

STATE OF CONNECTICUT · ANTHONY S. ONOFRIO · No. 25760 · LICENSED PROFESSIONAL ENGINEER


LANGAN
Langan CT, Inc.
555 Long Wharf Drive
New Haven, CT 06511
T: 203.562.5771 F: 203.789.6142 www.langan.com


Project: BURLINGTON COAT FACTORY EXPANSION AT BROOKSIDE PLAZA
50 HAZARD AVENUE
ENFIELD CONNECTICUT

Drawing Title: GRADING, DRAINAGE, UTILITY, AND EROSION CONTROL DETAILS II

Project No. 140161101
Date 5/22/2020
Drawn By BP
Checked By TSO

Drawing No. CG502

Sheet 9 of 9

© 2020 Langan

Filename: \\langan.com\data\NHV\data\140161101\Cadd Data - 140161101\SheetFiles\Civil_Burlington\140161101-CG501-0101.dwg Date: 9/18/2020 Time: 13:48 User: afedus Style Table: Langan.stb Layout: CG502

LANGAN

PROJECT NO. 140161101

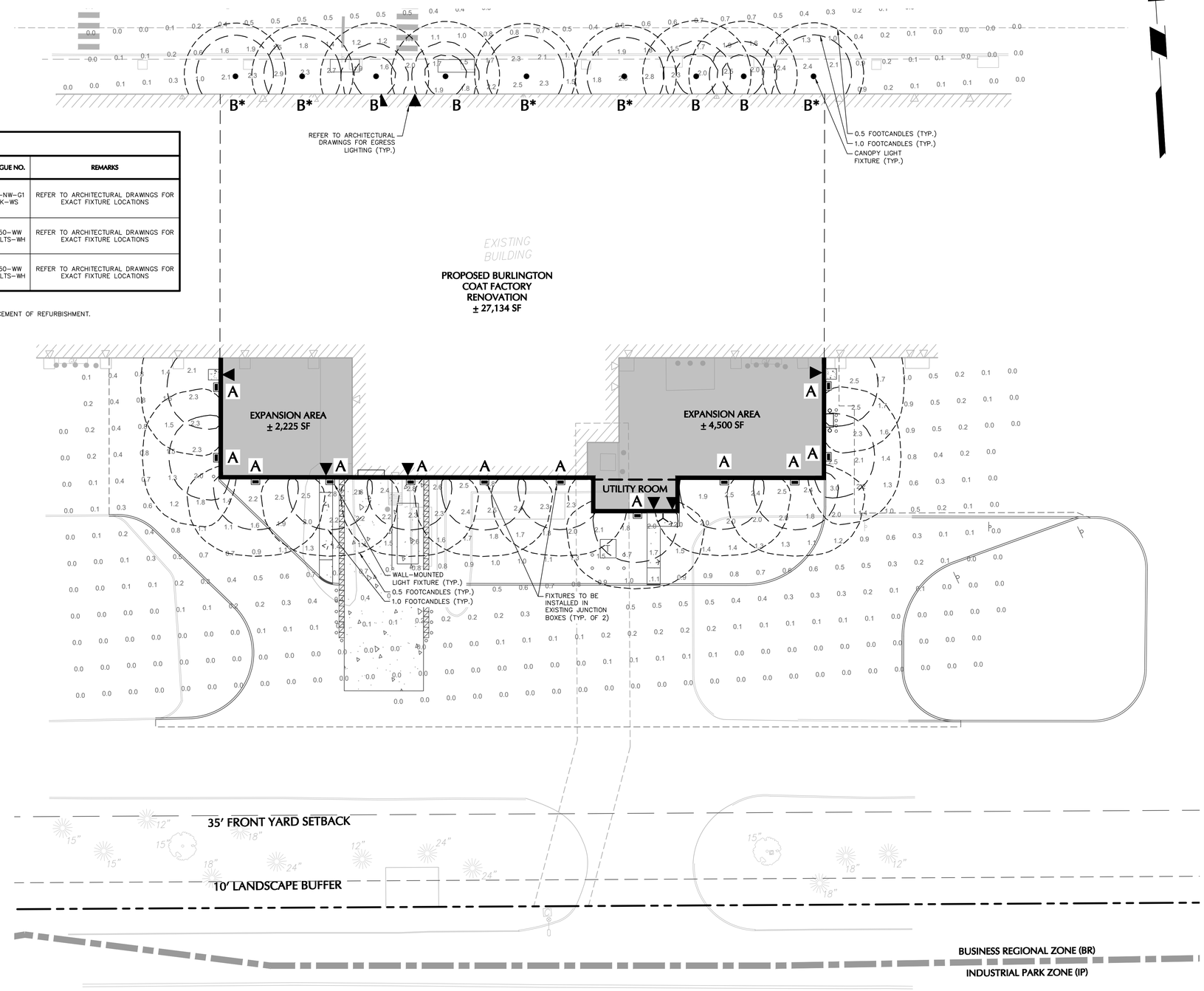


## SITE LIGHTING SCHEDULE

| SYMBOL | KEY | QTY. | FIXTURE MANUFACTURER | FIXTURE MODEL | FIXTURE DESCRIPTION | FIXTURE MOUNTING HEIGHT | LAMP | OPTICS | LUMENS | LLF | FIXTURE CATALOGUE NO. | REMARKS |
|---|---|---|---|---|---|---|---|---|---|---|---|---|
| ▬ | A | 12 | SIGNIFY–GARDCO | 101 LED SCONCE | WALL–MOUNTED FIXTURE; COLOR: BLACK | 15'–0" (ABOVE FFE) | 28W LED | TYPE 4 | 2,747 | .90 | 101L–16L–530–NW–G1 –4–VOLTS–BK–WS | REFER TO ARCHITECTURAL DRAWINGS FOR EXACT FIXTURE LOCATIONS |
| ● | B | 4 | SIGNIFY–GARDCO | SOFTVIEW LED PARKING GARAGE LUMINAIRE (SVPG) | CANOPY FIXTURE; COLOR: WHITE | 12'–3" (ABOVE FFE) | 22W LED | TYPE 5 | 2,395 | .90 | SVPG–140L–450–WW –G2–SM–5–VOLTS–WH | REFER TO ARCHITECTURAL DRAWINGS FOR EXACT FIXTURE LOCATIONS |
| ● | B* | 5 | SIGNIFY–GARDCO | SOFTVIEW LED PARKING GARAGE LUMINAIRE (SVPG) | CANOPY FIXTURE; COLOR: WHITE | 9'–3" (ABOVE FFE) | 22W LED | TYPE 5 | 2,395 | .90 | SVPG–140L–450–WW –G2–SM–5–VOLTS–WH | REFER TO ARCHITECTURAL DRAWINGS FOR EXACT FIXTURE LOCATIONS |

NOTES:
1. LIGHT FIXTURE QUANTITIES SHOWN ON THIS DRAWING ARE REPRESENTATIVE OF THE AREA SHOWN ONLY AND DO NOT REPRESENT TOTAL QUANTITIES FOR THE SITE.
2. EXISTING LIGHT FIXTURES TO REMAIN SHALL BE PROTECTED DURING CONSTRUCTION. CONTRACTOR IS RESPONSIBLE FOR ANY DAMAGE TO THESE FIXTURES INCLUDING REPLACEMENT OF REFURBISHMENT.
3. REFER TO ELECTRICAL DRAWINGS FOR SITE LIGHTING VOLTAGES.
4. CONTRACTOR TO CONFIRM CONTROLS SYSTEM REQUIRED BY THE OWNER AND PER CODE.

## STATISTICS

| DESCRIPTION | AVG. | MAX. | MIN. | MAX./MIN. | AVG./MIN. |
|---|---|---|---|---|---|
| PEDESTRIAN AREAS | 2.2fc | 2.9fc | 1.5fc | 1.9:1 | 1.5:1 |

NOTES:
LIGHTING PHOTOMETRY AND CALCULATIONS FOR EXISTING AND ADJACENT LIGHTING TO REMAIN ARE NOT INCLUDED IN THE ABOVE STATISTICS.

**NOTE:**
**REFER TO LL501 FOR LIGHTING NOTES AND DETAILS.**

| Date | Description | No. |
|---|---|---|
| 09/21/20 | P&Z ADMINISTRATIVE APPROVAL/IWWA AGENT APPROVAL | 2 |
| 06/18/20 | P&Z SUBMISSION | 1 |

REVISIONS

STATE OF CONNECTICUT MICHAEL SZURA 0001339
SIGNATURE MICHAEL SZURA DATE SIGNED
LICENSED LANDSCAPE ARCHITECT
STATE LIC. No. 1339


LANGAN
Langan CT, Inc.
555 Long Wharf Drive
New Haven, CT 06511
T: 203.562.5771 F: 203.789.6142 www.langan.com


Project
BURLINGTON COAT FACTORY EXPANSION AT BROOKSIDE PLAZA
50 HAZARD AVENUE
ENFIELD CONNECTICUT

Drawing Title
SITE LIGHTING PLAN

Project No. 140161101
Date 6/18/2020
Drawn By XW
Checked By JAMH

Drawing No. LL101

Sheet 11 of 12

LANGAN
PROJECT NO. 140161101

© 2020 Langan

Filename: \\langan.com\data\NHV\data1\140161101\cadd data - 140161101\sheetfiles\Civil_Burlington\140161101-LL101-0101.dwg Date: 9/23/2020 Time: 12:05 User: afedus Style Table: Langan.stb Layout: LL101

# LIGHTING NOTES:

## GENERAL

1. POINT–BY–POINT CALCULATIONS PROVIDED WITHIN HAVE BEEN PREPARED IN ACCORDANCE TO IESNA STANDARDS AND IN CONSIDERATION OF THE VARIABLES WITHIN THESE NOTES AND SITE LIGHTING SCHEDULE. THE VALUES SHOWN ON THE PLANS ARE NOT AN INDICATION OF THE INITIAL LIGHT INTENSITIES OF THE LAMPS. THESE VALUES ARE AN APPROXIMATION OF THE MAINTAINED INTENSITIES DELIVERED TO THE GROUND PLANE USING INDUSTRY STANDARD LIGHT LOSS FACTORS (LLF) WHICH COVER LAMP DEGRADATION AND NATURAL BUILDUP/ DIRT DEGRADATION ON THE FIXTURE LENS. THE LIGHTING PLAN IS DESIGNED WITH AN INDUSTRY STANDARD LLF IN ACCORDANCE WITH GUIDANCE AS PROVIDED BY IESNA. MINOR VARIATIONS IN TOPOGRAPHY, PHYSICAL OBSTRUCTIONS, AMBIENT OR ADJACENT LIGHT SOURCES AND/OR OTHER POTENTIAL IMPACTS HAVE NOT BEEN INCLUDED IN THESE CALCULATIONS. THEREFORE, AS–BUILT LIGHT INTENSITIES MAY VARY, IN EITHER DIRECTION, FROM WHAT IS EXPLICITLY PORTRAYED WITHIN THESE DRAWINGS.NO GUARANTEE OF LIGHT LEVELS IS EXPRESSED OR IMPLIED BY THE POINT BY POINT CALCULATIONS SHOWN ON THESE PLANS.

2. LIGHT LEVEL POINT SPACING IS 10 FT. LEFT TO RIGHT AND 10 FT. TOP TO BOTTOM. POINT BY POINT CALCULATIONS ARE BASED ON THE LIGHT LOSS FACTOR AS STATED IN THE LIGHTING SCHEDULE.

## COMPLIANCE

3. ALL SITE LIGHTING RELATED WORK AND MATERIALS SHALL COMPLY WITH CITY, COUNTY, AND OTHER APPLICABLE GOVERNING AUTHORITY REQUIREMENTS.

4. LIGHTING LAYOUT COMPLIES WITH THE ILLUMINATING ENGINEERING SOCIETY OF NORTH AMERICA (IESNA) SAFETY STANDARDS FOR LIGHT LEVELS.

## COORDINATION

5. CONTRACTOR TO COORDINATE POWER SOURCE WITH LIGHT FIXTURES TO ENSURE ALL SITE LIGHTING IS OPERATING EFFECTIVELY, EFFICIENTLY AND SAFELY.

6. REFER TO ELECTRIFICATION PLAN FOR PROVIDING ADEQUATE POWER FOR SITE LIGHTING.

7. CONTRACTOR TO COORDINATE LOCATION OF EASEMENTS, UNDERGROUND UTILITIES AND DRAINAGE BEFORE DRILLING POLE BASES.

8. INSTALLATION OF ALL LIGHTING FIXTURES, POLES, FOOTINGS, AND FEEDER CABLE TO BE COORDINATED WITH ALL SITE WORK TRADES TO AVOID CONFLICT WITH FINISHED AND PROPOSED WORK.

9. CONTRACTOR TO COORDINATE INSTALLATION OF UNDERGROUND FEEDER CABLE FOR EXTERIOR LIGHTING WITH EXISTING AND PROPOSED UTILITIES, SITE DRAINAGE SYSTEMS, AND PAVING. CONTRACTOR SHALL PROMPTLY NOTIFY THE OWNER'S REPRESENTATIVE SHOULD ANY UTILITIES, NOT SHOWN ON THE PLANS, BE FOUND DURING EXCAVATIONS.

## WALL MOUNTED FIXTURES

10. CONTRACTOR TO COORDINATE INSTALLATION OF ALL THE WALL MOUNTED FIXTURES AND ELECTRICAL CONNECTIONS TO SITE STRUCTURE(S) WITH BUILDING MEP, ARCHITECT, AND/OR OWNER.

11. INSTALLATION AND ELECTRICAL CONNECTIONS FOR WALL MOUNTED FIXTURES TO BE COORDINATED WITH ARCHITECTURAL, STRUCTURAL, UTILITY AND SITE PLANS AND TO BE IN ACCORDANCE WITH ALL APPLICABLE CODES.

## ADJUSTMENT AND INSPECTION

12. CONTRACTOR TO OPERATE EACH LUMINAIRE AFTER INSTALLATION AND CONNECTION. INSPECT FOR IMPROPER CONNECTIONS AND OPERATION.

13. CONTRACTOR TO AIM AND ADJUST ALL LUMINAIRES TO PROVIDE ILLUMINATION LEVELS AND DISTRIBUTION AS INDICATED ON THE CONSTRUCTION DRAWINGS OR AS DIRECTED BY THE LANDSCAPE ARCHITECT AND/OR OWNER.

14. CONTRACTOR TO CONFIRM THAT LIGHT FIXTURES, TILT ANGLE AND AIMING MATCH SPECIFICATIONS ON THE PLANS.

## REQUIREMENTS FOR ALTERNATES

15. ALL LIGHTING SUBSTITUTIONS MUST BE MADE WITHIN 14 DAYS PRIOR TO THE BID DATE TO PROVIDE AMPLE TIME FOR REVIEW AND TO ISSUE AN ADDENDUM INCORPORATING THE SUBSTITUTION WITH THE FOLLOWING REQUIREMENTS:
    - A. ANY SUBSTITUTION TO LIGHTING FIXTURES, POLES, ETC. MUST BE APPROVED BY THE OWNER, ENGINEER AND TENANTS. ANY COST ASSOCIATED WITH REVIEW AND/OR APPROVAL OF THE SUBSTITUTIONS SHALL BE ENTIRELY BORNE BY THE CONTRACTOR
    - B. COMPUTER PREPARED PHOTOMETRIC LAYOUT OF THE PROPOSED LIGHTED AREA WHICH INDICATES, BY ISOFOOTCANDLE, THE SYSTEM'S PERFORMANCE.
    - C. A PHOTOMETRIC REPORT FROM A NATIONAL INDEPENDENT TESTING LABORATORY WITH REPORT NUMBER, DATE, FIXTURE CATALOG NUMBER, LUMINAIRE AND LAMP SPECIFICATIONS; IES CALCULATIONS, POINT BY POINT FOOT CANDLE PLAN, STATISTIC ZONES SHOWING AVERAGE, MAXIMUM, MINIMUM AND UNIFORMITY RATIOS, SUMMARY, ISOLUX PLOT, AND CATALOGUE CUTS. CATALOGUE CUTS MUST IDENTIFY OPTICS, LAMP TYPE, DISTRIBUTION TYPE, REFLECTOR, LENS, BALLASTS, WATTAGE, VOLTAGE, FINISH HOUSING DESCRIPTION AND ALL OTHER PERTINENT INFORMATION.
    - D. POLE MANUFACTURER AASHTO CALCULATIONS INDICATING THE POLE AND ANCHOR BOLTS BEING SUBMITTED ARE CAPABLE OF SUPPORTING THE POLE AND FIXTURE SYSTEMS BEING UTILIZED IN ACCORDANCE WITH THE CONTRACT DOCUMENTS.
    - E. THE UNDERWRITERS LABORATORY LISTING AND FILE NUMBER FOR THE SPECIFIC FIXTURE(S) TO BE UTILIZED.
    - F. A COLOR PHOTOGRAPH THAT CLEARLY SHOWS THE REPLACEMENT FIXTURE POLE MOUNTED, THE FIXTURE'S COLOR, FINISH, AND PHYSICAL CHARACTERISTICS.

GARDCO by Signify

**Wall Mount**

LED Wall Sconce

101L

Project:
Location:
Cat.No:
Type:
Lamps: Qty:
Notes:

Gardco 101 LED wall sconces feature a low-profile design that provides wide flexibility in high performance exterior wall illumination. Full cutoff performance, usable illumination patterns, and powerful wattages combine into a compact and architecturally pleasing design. 101L sconces are available In Type 2, 3, and 4 distributions, and provide output of up to 9500 lumens. Energy saving control options increase energy savings and offer California Title 24 compliance. Emergency Battery Backup option available for path of egress.

**Ordering guide** — example: 101L-32L-700-NW-G1-3-120-IMRI2-BZ

| Prefix | Number of LEDs | Drive Current | LED Color – Generation | Distribution | Emergency | Voltage | Options: Controls | Options: Electrical | Options: Finish |
|---|---|---|---|---|---|---|---|---|---|
| **101L** | | | | | | | | | |
| **101L** 101L LED Wall Sconce | **16L** 16 LEDs (1 module) | **530** 530mA<br>**650** 650mA<br>**700** 700mA<br>**1000** 1000mA<br>**1200** 1200mA | **CW-G1** Cool White 5700K, 70CRI Generation 1<br>**NW-G1** Neutral White 4000K, 70CRI Generation 1<br>**WW-G1** Warm White 3000K, 70CRI Generation 1 | **2** Type 2<br>**3** Type 3<br>**4** Type 4 | **EBPC** Emergency Battery Pack Cold Weather[1,2,3,4]<br>Leave blank to omit an emergency option | **UNV** 120-277V<br>**HVU** 347-480V<br>**120** 120V<br>**208** 208V<br>**240** 240V<br>**277** 277V<br>**347** 347V<br>**480** 480V | **DD** 0-10V Dimming Driver[5,6]<br>**DCC** Dual Circuit Control[6,7,8]<br>**DynaDimmer:** Automatic Profile Dimming<br>**CS50** Safety 50% Dimming (7 hours)[9,10]<br>**CM50** Median 50% Dimming (8 hours)[10,11]<br>**CE50** Economy 50% Dimming (9 hours)[10,11]<br>**DA50** All Night 50% Dimming[10,11]<br>**Photoelectric/Receptacle systems (Twist Lock Receptacle)**<br>**PCR** Photocontrol Button[12,13,14]<br>**TLR05** Twist Lock Receptacle 5–2Wy[13]<br>**TLR07** Twist Lock Receptacle 7–2Wy[13]<br>**TLRPC** Twist Lock Receptacle w/ Photocell[13,14]<br>**Infrared Motion Response systems**<br>**IMRI2** Integral with #2 lens[13,15,16]<br>**IMRI3** Integral with #4 lens[13,15,16]<br>**Network system (SiteWise)**<br>**SW** SW Integral module[6,17]<br>**Wireless system**<br>**LLC2** Integral module with #2 lens[13,15,18]<br>**LLC3** Integral module with #3 lens[13,15,18] | **Fusing**<br>**F1** Single (120, 277, 347VAC)[1]<br>**F2** Double (208, 240, 480VAC)[1]<br>**F3** Canadian Double Pull (208, 240, 480VAC)[1]<br>**Customer specified**<br>**RAL** Specify optional color or RAL (ex: OC-LGP or OC-RAL7024)<br>**CC** Custom color (Must supply color chip for required factory quote) | **Textured**<br>**BK** Black<br>**WH** White<br>**BZ** Bronze<br>**DGY** Dark Gray<br>**MGY** Medium Gray<br>**Customer specified**<br>**RAL** Specify optional color or RAL (ex: OC-LGP or OC-RAL7024)<br>**CC** Custom color (Must supply color chip for required factory quote) |
| | **32L** 32 LEDs (2 modules) | **530** 530mA<br>**650** 650mA<br>**700** 700mA<br>**1000** 1000mA | | | | | | | |

1. 650mA only available with Emergency Battery Pack Cold Rated (EBPC) option
2. 32L rated for 30°C at 1000mA
3. Available for use with 16L and 32L in 530mA or 650mA only. Rated for -20°C to 35° C.
4. Available in 120 or 277V only.
5. Not available with Dual Circuit Control (DCC) option.
6. EBPC is not available with DCC.
7. Not available with Dimming Driver (DD) option.
8. Available in 32L with 530mA. Consult technical support center for use with photocell and CS/CM/CE/DA.
9. Available in 120-277V (UNV) only.
10. Not available with LLC, TLR and DCC.
11. Not available with 480V.
12. Must specify input voltage.
13. TLR05/7 option not available with LLC, PCB, DCC. Works with 3 or 5 pin NEMA photocell dimming. Dimming will not be connected to TLR if ordering with DD, CS/CM/CE/DA and IMRI.
14. Not available with DD, DCC or LLC.
15. LLC2/3 Not available with TLR, PCB, IMRI, CS/CM/CE/DA. Ships with WS accessory attached to wireless module. Not for use with LLCR accessory.
16. Not available with PCB, TLR05/7, DCC, LLC.
17. SW option is not available with any other control options with the exception of IMRI2, IMRI3 motion response options.

101L 10/18 page 1 of 7

1 LIGHT FIXTURE TYPE A
NTS

GARDCO by Signify

**Garage & Canopy**

SoftView

SVPG with comfort optics

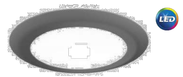

**Gardco SoftView LED parking garage luminaires** feature edge lit technology, providing visual comfort with minimal glare to enhance the user experience. An added uplight feature reduces the cave effect for an increased sense of security. SoftView features multiple optical distributions, lumen packages and mounting options providing you with the ideal solution for your garage lighting and low bay needs. Optional emergency battery backup available for path of egress lighting and is integral to the luminaire.

Project:
Location:
Cat.No:
Type:
Lumens: Qty:
Notes:

**Ordering guide** — example: SVPG-140L-2100-NW-G2-SM-5 -120-BL-IMRI2-MGY

| Luminaire | Number of LEDs | Drive Current | Color Temperature | Mounting | Distribution | Emergency | Voltage | Options: Dimming controls | Options: Motion sensor(s) | Options: Electrical | Options: Finish |
|---|---|---|---|---|---|---|---|---|---|---|---|
| **SVPG** | | | | | | | | | | | |
| **SVPG** SoftView Parking Garage | **140L** 140 LEDs (comfort engine)<br>**286L**[1] 286 LEDs (comfort engine) | **450** 450mA<br>**800** 800mA<br>**1200** 1200mA<br>**1675**[1,2,3] 1675mA<br>**2100**[1,2,3,4] 2100mA<br>**1200**[5] 1200mA<br>**1675**[1,2,3] 1675mA<br>**2100**[1,2,3,4] 2100mA<br>**2400**[1,2,3,4,5,6] 2400mA<br>**3000**[1,2,3,4,5,6,7] 3000mA<br>**3400**[1,2,3,4,5,6,7] 3400mA | **NW-G2** Warm White 3000K (70 CRI) Generation 2<br>**CW-G2**[8] Cool White 5000K (70 CRI) Generation 2<br>**WW-G2**[8] Warm Yellow 2700K (80 CRI) Generation 2<br>**NW-G3** Neutral White 4000K (70 CRI) Generation 2<br>**CW-G3**[8] Cool White 5000K (70 CRI) Generation 2<br>**WW-G3**[8] Warm Yellow 2700K (80 CRI) Generation 2<br>**BW-G3** Balanced White 3500K (90 CRI) Generation 2<br>**BW-G2**[8] Balanced White 3500K (90 CRI) Generation 2<br>**BO-G2**[8] 3000K (80CRI) Generation 2<br>**BO-G3**[8] 4000K (80CRI) Generation 2<br>**BO-G2**[8] 5000K (80CRI) Generation 2 | **SM** Surface / indirect pendant Mount, Normal vibration rated (pendant and junction box by others)<br>**SBO** Surface Mount, Bridge / Overpass vibration rated<br>**PM** Direct Pendant Mount, Bridge / Overpass vibration rated (pendant and junction box by others)<br>**T**[9] Trunnion Mount (must also order separate line item TM mounting kit, see Accessories)<br>**WM** Wall Mount (must also order separate line item WM mounting kit, see Accessories) | **1R** Type IR Rectangular<br>**3**[10] Type III Asymmetric<br>**5** Type V<br>**CD** Concentrated Downlight | **none** leave blank<br>**EBP**[11,12,13,14] Emergency Battery pack<br>**EBPC**[11,12,13,15] Emergency Battery pack cold rated | **120** 120V<br>**208** 208V<br>**240** 240V<br>**277** 277V<br>**UNV** Universal 120-277V<br>**347** 347V<br>**480**[1] 480V<br>**HVU**[1] Universal 347-480V | **none** leave blank<br>**DD**[16,17,18,19] 0-10V Dimming wires for dimming external leads (controls by others)<br>**BL**[17,19] Bi-level with motion sensor<br>**LLC**[17,19,20,21,22] Wireless Controls | **none** leave blank<br>**IMRI2**[17,19] Integral Motion Response, #2 lens<br>**IMRI3**[17,19] Integral Motion Response, #3 lens<br>**IMRI7**[17,19] Integral Motion Response, #7 lens<br>(Factory customizable, contact factory*) | **Fusing**<br>**none** leave blank<br>**F1** Single Fuse (120, 277, 347V)<br>**F2**[1] Double Fuse (208, 240, 480V)<br>**F3**[1] Double Fuse Canadian, double pull (208, 240, 480V)<br>**Surge Protection**<br>**blank** SPI 10KV 10KA (standard)<br>**SP2** 20KV 10KA (option) | **BZ** Bronze<br>**MGY** Medium Gray<br>**WH** White<br>**OC*** Optional Color Specify optional color or RAL, ex: OC-LGP or OC-RAL7024.<br>**SC*** Special Color Must supply color chip. Requires factory quote. |

1. Choose either **EBP** suitable for 0°C (32°F) to +40°C (+104°F) or **EBPC** suitable for -20°C (-4°F) to +40°C (+104°F).
2. **EBP** or **EBPC** not available with **347V**, **480V** or **HVU**
3. **EBP** not available with 1675mA, 2100mA, 2400mA, 3000mA or 3400mA due to thermal restrictions.
4. **EBPC** not available with 2100mA, 2400mA, 3000mA or 3400mA due to thermal restrictions.
5. Must contact factory prior to ordering - these items are ETO Specials.
6. **LLC** not available with Emergency options (**EBP**, **EBPC**) due to thermal and fit restrictions.
7. Available with **120V**, **208V**, **240V**, **277V** or **UNV** only.
8. Provide specific input voltage.
9. Luminaire includes 0-10V dimming wires for dimming control by others.
10. 0-10V dimming driver standard.
11. Must be combined with Motion Sensing option (**IMRI2** or **IMRI3** or **IMRI7**), choose only 1 Motion Sensing option.
12. Must be combined with Dimming Controls option (**BL** or **LLC**).
13. Not available with Motion Sensing.
14. Choose only 1 Dimming Controls option: either **DD** or **BL** or **LLC**.
15. Trunnion Mount (**T**) not available with both **DD** and **EBP** or **EBPC**; is available with each individually (**DD** or **EBP** or **EPBC**).
16. **IMRI2**, **IMRI3**, or **IMRI7** not available with 3000mA or 3400mA due to thermal restrictions.
17. Extended lead times apply. Contact factory for details.
18. **5** Type III Asymmetric not available with any 286L configurations due to thermal and fit restrictions.
19. **LLC** Wireless Controls not available with 2400mA, 3000mA, or 3400mA due to fit restrictions (2x drivers).

SoftView_Gen2-Parking_Garage_luminaire 10/19 page 1 of 5

2 LIGHT FIXTURE TYPE B
NTS

| Date | Description | No. |
|---|---|---|
| 09/21/20 | P&Z ADMINISTRATIVE APPROVAL/IWWA AGENT APPROVAL | 2 |
| 06/18/20 | P&Z SUBMISSION | 1 |

REVISIONS

STATE OF CONNECTICUT MICHAEL SZURA 1339

SIGNATURE MICHAEL SZURA DATE SIGNED
LICENSED LANDSCAPE ARCHITECT
STATE LIC. No. 1339


LANGAN
Langan CT, Inc.
555 Long Wharf Drive
New Haven, CT 06511
T: 203.562.5771 F: 203.789.6142 www.langan.com


Project
BURLINGTON COAT FACTORY EXPANSION AT BROOKSIDE PLAZA
50 HAZARD AVENUE
ENFIELD CONNECTICUT

Drawing Title
SITE LIGHTING NOTES & DETAILS

Project No. 140161101
Date 06/18/2020
Drawn By XW
Checked By JA/MH

Drawing No. LL501

Sheet 12 of 12

LANGAN
PROJECT NO. 140161101

© 2020 Langan

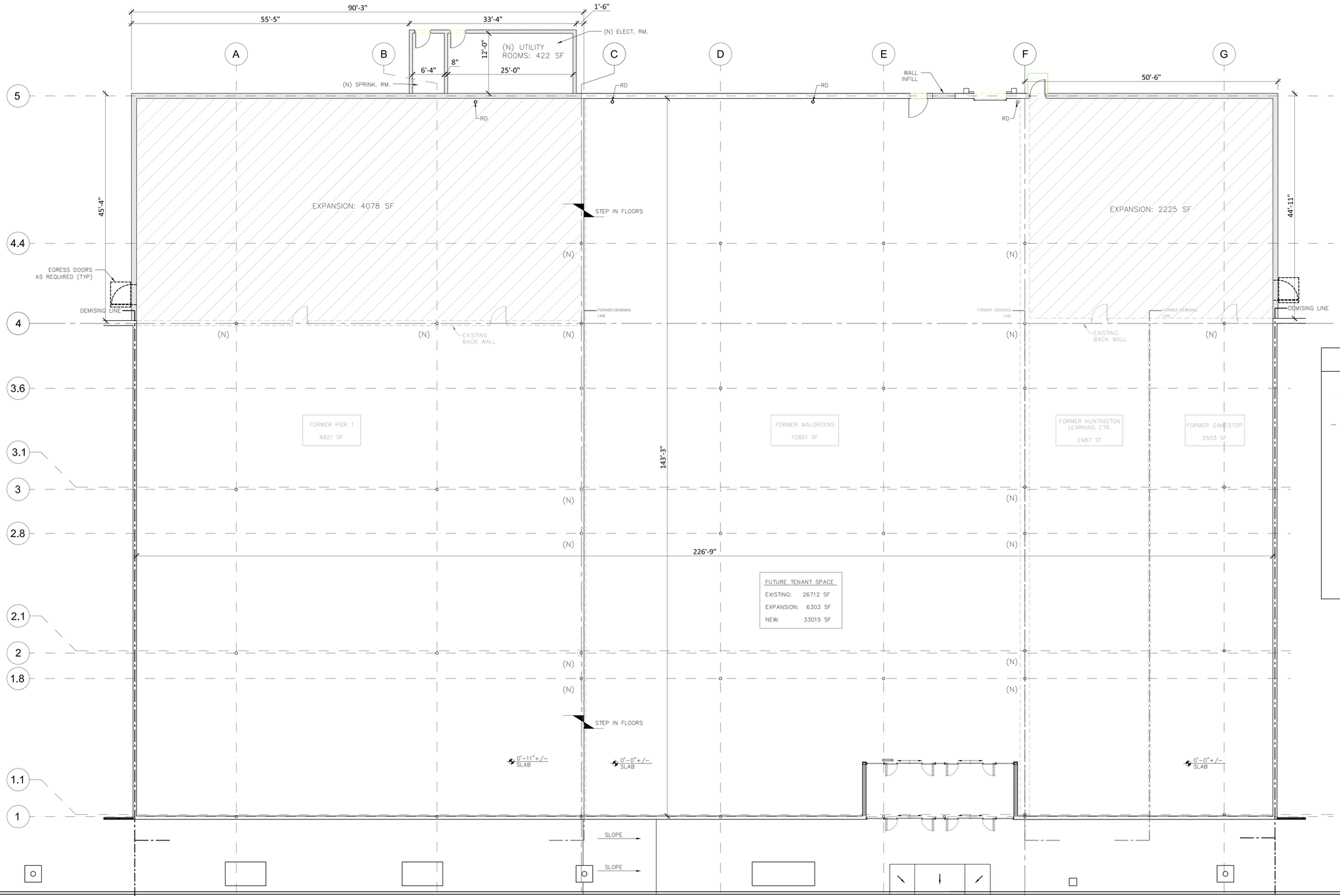


**NEW LOD PLAN**
**1/8" = 1'-0"**

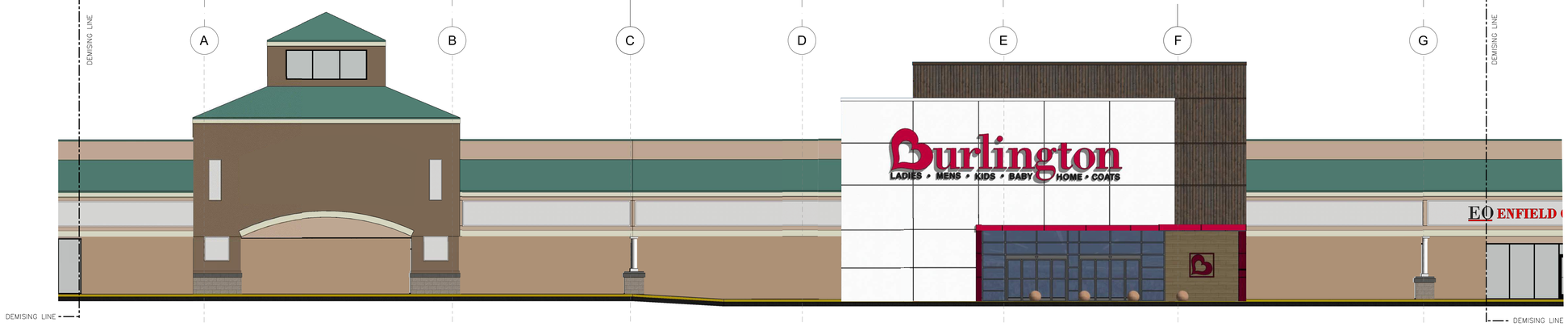


**PROPOSED ELEVATION**
**1/8 = 1'-0"**

## LEGEND

- EXISTING COL. LINE
- NEW COL. LINE
- (N) DENOTES POSSIBLE LOCATION OF NEW STRUCTURAL COL.
- NEW EXTERIOR MASONRY WALL
- AREA OF EXPANSION
- EXISTING DEMISING AND EXTERIOR WALLS


SARGENTI
1628 JFK BOULEVARD, PHILADELPHIA, PA 19103
T|215.482.1950 • WWW.SARGARCH.COM


CONSULTANTS

CONSULTANTS

ARCHITECTURAL SEAL

| DATE | ISSUE |
|---|---|
| 09/17/20 | COORDINATED ENTRY |
| 07/27/20 | ADDED UTILITY ROOM |
| 04/02/20 | OWNER REVIEW |

PROJECT NAME / LOCATION

PROPOSED LOD

BROOKSIDE PLAZA
30 HAZARD AVENUE
ENFIELD, CT

PROJECT INFORMATION

DATE: 04/01/2020
PROJECT NO. 5327-20
DRAWN BY: PAS

FOR OWNER REVIEW

SHEET TITLE / NUMBER

LOD-1