NEW SINGLE FAMILY RESIDENCE

16 CRESCENT BEACH ROAD
ENFIELD, CT 06082

CONSTRUCTION DOCUMENTS

9/16/2020

ARCHITECTURE

STEPHEN JAGER ASSOCIATES LLC

4 GRAND VIEW DRIVE
ENFIELD, CT 06082
PHONE: (860) 803-1265
EMAIL: SJSL@AOL.COM

STRUCTURAL

RZ DESIGN ASSOCIATES, INC

750 OLD MAIN STREET
SUITE 202
ROCKY HILL, CT 06067
PHONE: (860) 436-4336
RZDESIGNASSOCIATES.COM

DRAWING LIST

DRAWING NO.	DRAWING NAME
A0	COVER SHEET
A1	FOUNDATION & BASEMENT FLOOR PLANS
A2	1ST FLOOR PLAN
A3	2ND FLOOR PLAN
A4	EXTERIOR ELEVATIONS
A5	EXTERIOR ELEVATIONS
A6	BUILDING SECTION
A7	BUILDING SECTION
A8	BUILDING SECTION
S1	1ST FLOOR FRAMING PLAN
S2	2ND FLOOR FRAMING PLAN
S3	ROOF FRAMING PLAN

FOUNDATION PLAN NOTES:

1. FLOOR SLAB TO BE 4" FIBERMESH CONCRETE CAST ON MINIMUM 6 MIL VAPOR BARRIER ATOP MINIMUM 6" LAYER OF COMPACTED GRAVEL FILL.
2. BOTTOM OF FOOTING ELEVATION TO BE MINIMUM 3'-6" BELOW FINISH GRADE.
3. COORDINATE BOTTOM OF FOOTING ELEVATIONS WITH UTILITIES & SITE PLAN, NOTIFY ARCHITECT OF CONFLICTS FOR FURTHER INSTRUCTIONS.
4. ASSUMED ALLOWABLE SOIL BEARING PRESSURE IS 3000 LBS PER SQ. FT. (PSF).
5. CONCRETE TO HAVE MINIMUM COMPRESSIVE STRENGTH OF 4000 PSI AT 28 DAYS.
6. REINFORCING TO BE FY = 60000 PSI, CONFORMING TO ASTM A615.
7. REINFORCING TO LAP A MINIMUM OF 48 BAR DIAMETERS. PROVIDE CORNER BARS TO LAP WITH CONTINUOUS WALL REINFORCING.
8. FOOTINGS TO BEAR ON VIRGIN UNDISTURBED INORGANIC SOIL.
9. PROVIDE CONTINUOUS 2-2X6 PRESSURE TREATED (PT) SILL ATOP CONCRETE FOUNDATION WALLS AND ANCHOR PLATES TO CONCRETE FOUNDATION WALLS WITH 5/8" DIAMETER X 1'-3" HOOKED ASTM A307 ANCHOR RODS AT 4'-0" O/C MAXIMUM, WITH ADDITIONAL HOOKED ANCHOR RODS WITHIN 12" OF EACH SIDE OF EACH CORNER, PLATE BUTT SPLICES, AND END OF PLATES. PROVIDE ANCHOR RODS WITH 3" X ¼" X 3" STEEL WASHER PLATES.
10. LOWER TOP OF CONCRETE FOUNDATION WALLS A MINIMUM 8" AT DOORWAYS, AND HAUNCH CONCRETE SLAB ON GRADE OVER WALL. PROVIDE #4 AT 12" O/C MAXIMUM VERTICAL INVERTED 'L' SHAPED DOWELS WITH 2'-0" VERTICAL LEG X 2'-0" HORIZONTAL LEG, WITH VERTICAL LEG EMBEDDED INTO CONCRETE FOUNDATION WALL AND HORIZONTAL LEG EMBEDDED ALONG CENTER OF CONCRETE SLAB ON GRADE.

5 BASE PLATE DETAIL 01
3" = 1'-0"

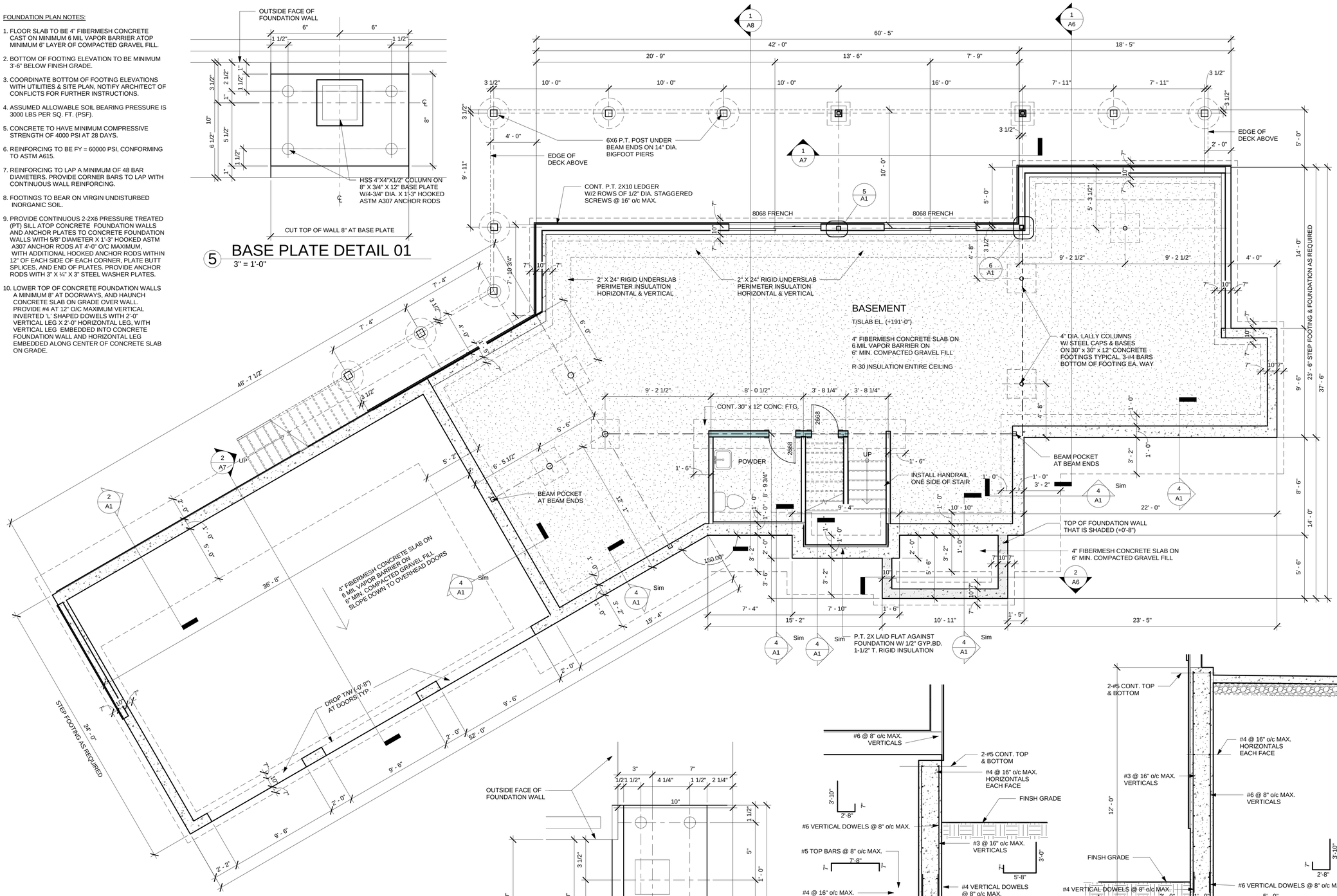

1 BASEMENT FLOOR PLAN
1/4" = 1'-0"

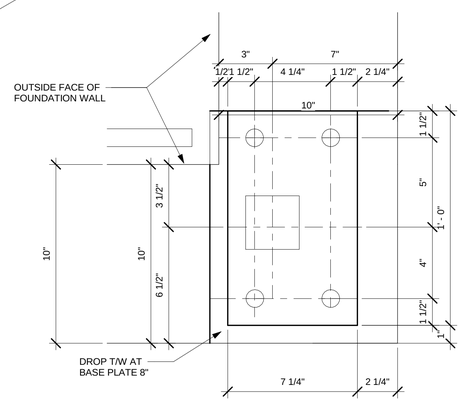

6 BASE DETAIL 02
3" = 1'-0"

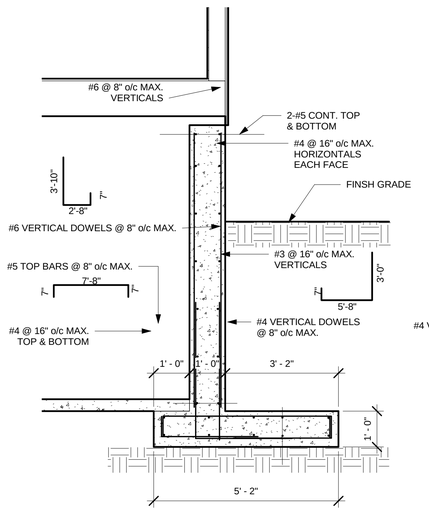

4 REATAINING WALL B
1/2" = 1'-0"

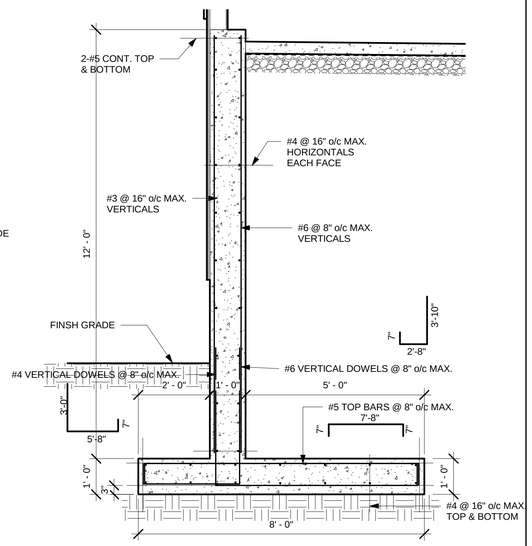

2 RETAINING WALL A
1/2" = 1'-0"

Stephen Jager, AIA

JAGER ASSOCIATES LLC

4 Grand View Drive Enfield, CT 06082
860-803-1265 sjsl@aol.com

This document contains confidential information, is an instrument of service and the property of the Architect. It shall not be used on other projects or for the extension of this project without the Architect's written approval.

All products, fixtures, and equipment shall be installed in accordance with manufacturers' installation instructions and all applicable codes.

All dimensions, materials, and specifications are to be verified by the Contractor prior to the commencement of work.

The Contractor shall be responsible for construction means, methods, techniques, sequences, and safety precautions in connection with the work.

PROJECT NAME:
NEW SINGLE FAMILY RESIDENCE

PROJECT ADDRESS:
16 CRESCENT BEACH ROAD
ENFIELD, CT 06082

PROJ NO:
2020.18

ISSUE DATE:
9/16/2020

REVISION DATE:

DRAWING
FOUNDATION & BASEMENT FLOOR PLANS

9/16/2020 12:39:46 PM

A1

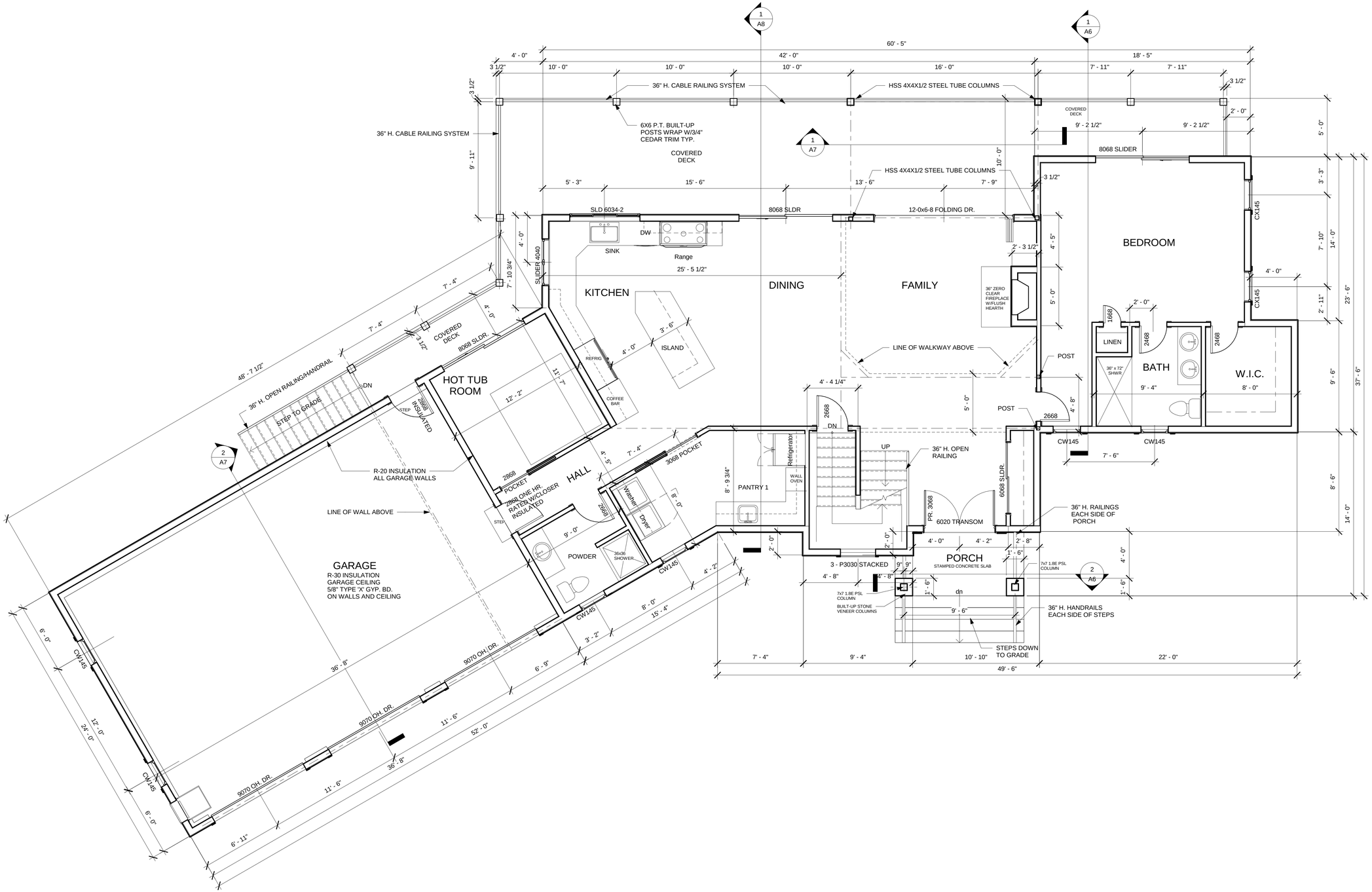

1 FIRST FLOOR PLAN
1/4" = 1'-0"

Stephen Jager, AIA

JAGER ASSOCIATES LLC

4 Grand View Drive Enfield, CT 06082
860-803-1265 sjsl@aol.com

This document contains confidential information, is an instrument of service and the property of the Architect. It shall not be used on other projects or for the extension of this project without the Architect's written approval.

All products, fixtures, and equipment shall be installed in accordance with manufacturers' installation instructions and all applicable codes.

All dimensions, materials, and specifications are to be verified by the Contractor prior to the commencement of work.

The Contractor shall be responsible for construction means, methods, techniques, sequences, and safety precautions in connection with the work.

PROJECT NAME:

NEW SINGLE FAMILY RESIDENCE

PROJECT ADDRESS:

16 CRESCENT BEACH ROAD
ENFIELD, CT 06082

PROJ NO:

2020.18

ISSUE DATE:

9/16/2020

REVISION DATE:

DRAWING

1ST FLOOR PLAN

A2

9/16/2020 12:40:04 PM

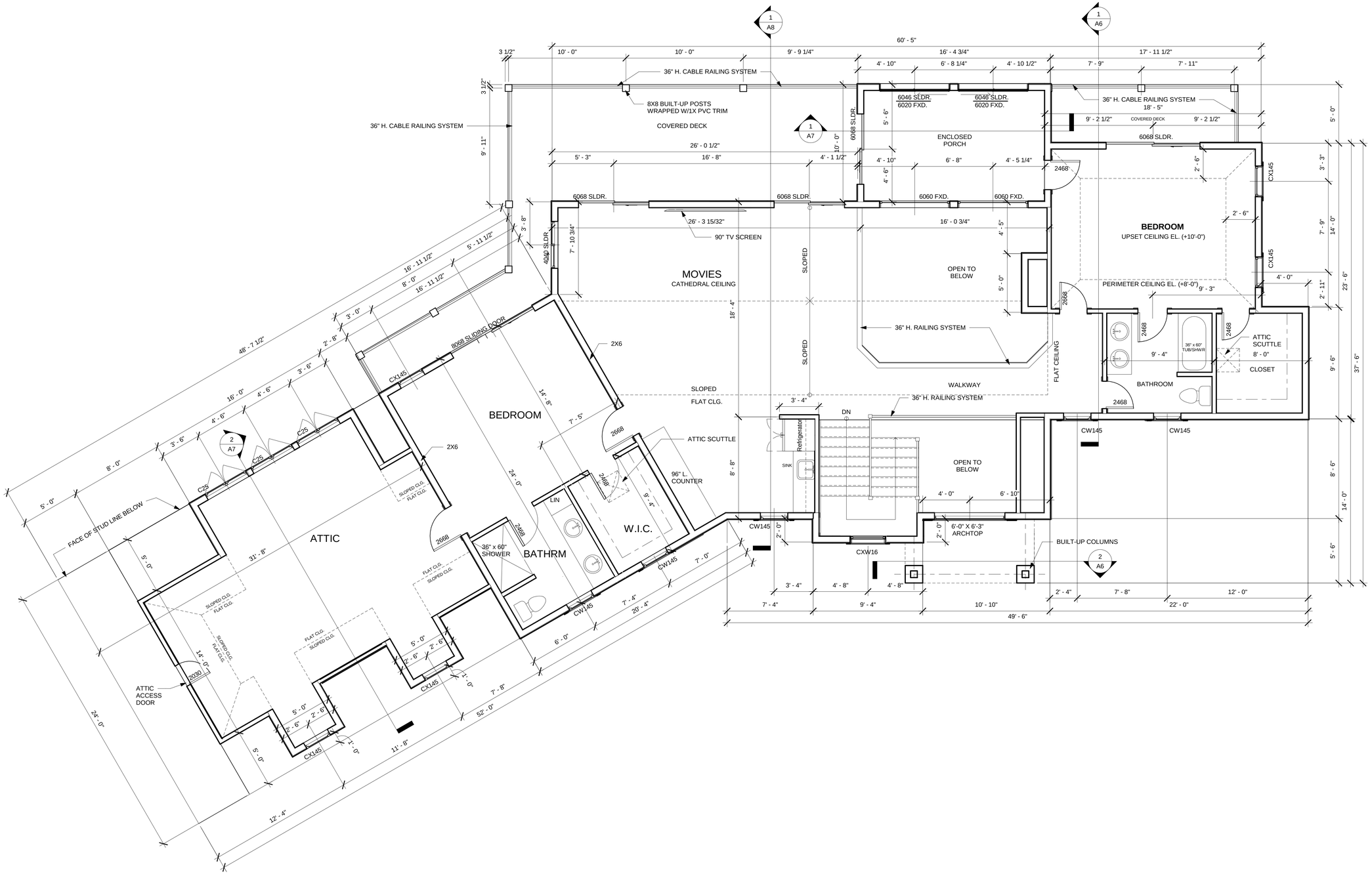

1 2ND FLOOR
1/4" = 1'-0"

NORTH

Stephen Jager, AIA

JAGER ASSOCIATES LLC

4 Grand View Drive Enfield, CT 06082
860-803-1265 sjsl@aol.com

This document contains confidential information, is an instrument of service and the property of the Architect. It shall not be used on other projects or for the extension of this project without the Architect's written approval.

All products, fixtures, and equipment shall be installed in accordance with manufacturers' installation instructions and all applicable codes.

All dimensions, materials, and specifications are to be verified by the Contractor prior to the commencement of work.

The Contractor shall be responsible for construction means, methods, techniques, sequences, and safety precautions in connection with the work.

PROJECT NAME:
NEW SINGLE FAMILY RESIDENCE

PROJECT ADDRESS:
16 CRESCENT BEACH ROAD
ENFIELD, CT 06082

PROJ NO: 2020.18

ISSUE DATE: 9/16/2020

REVISION DATE:

DRAWING
2ND FLOOR PLAN

A3

9/17/2020 6:10:36 PM

2 WEST ELEVATION
1/4" = 1'-0"

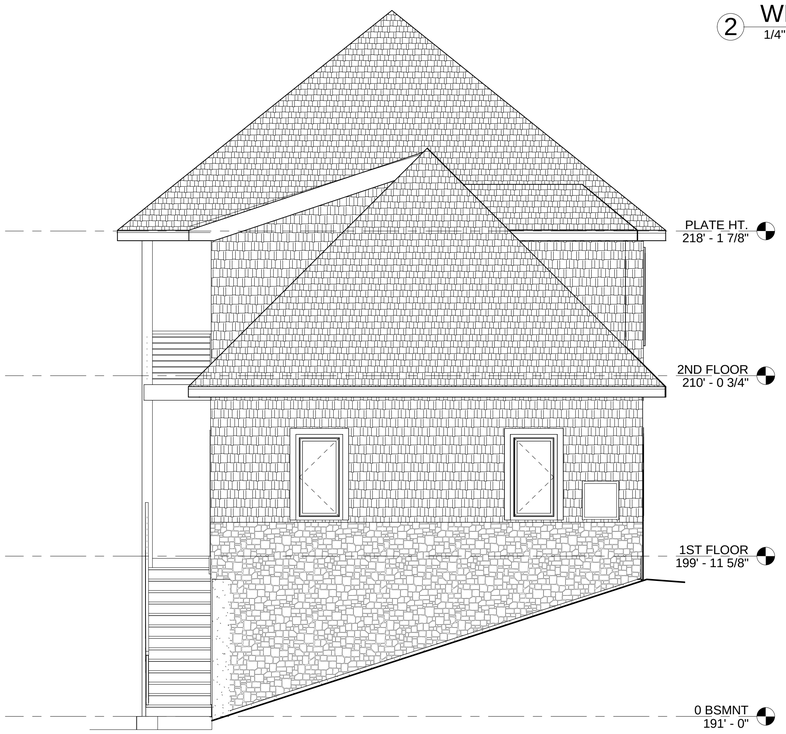

1 SOUTH ELEVATION
1/4" = 1'-0"

Stephen Jager, AIA
JAGER ASSOCIATES LLC
4 Grand View Drive Enfield, CT 06082
860-803-1265 sjsl@aol.com

This document contains confidential information, is an instrument of service and the property of the Architect. It shall not be used on other projects or for the extension of this project without the Architect's written approval.

All products, fixtures, and equipment shall be installed in accordance with manufacturers' installation instructions and all applicable codes.

All dimensions, materials, and specifications are to be verified by the Contractor prior to the commencement of work.

The Contractor shall be responsible for construction means, methods, techniques, sequences, and safety precautions in connection with the work.

PROJECT NAME:
NEW SINGLE FAMILY RESIDENCE

PROJECT ADDRESS:
16 CRESCENT BEACH ROAD
ENFIELD, CT 06082

PROJ NO:
2020.18

ISSUE DATE:
9/16/2020

REVISION DATE:

DRAWING
EXTERIOR ELEVATIONS

9/16/2020 12:42:44 PM

A4

1 EAST ELEVATION
1/4" = 1'-0"

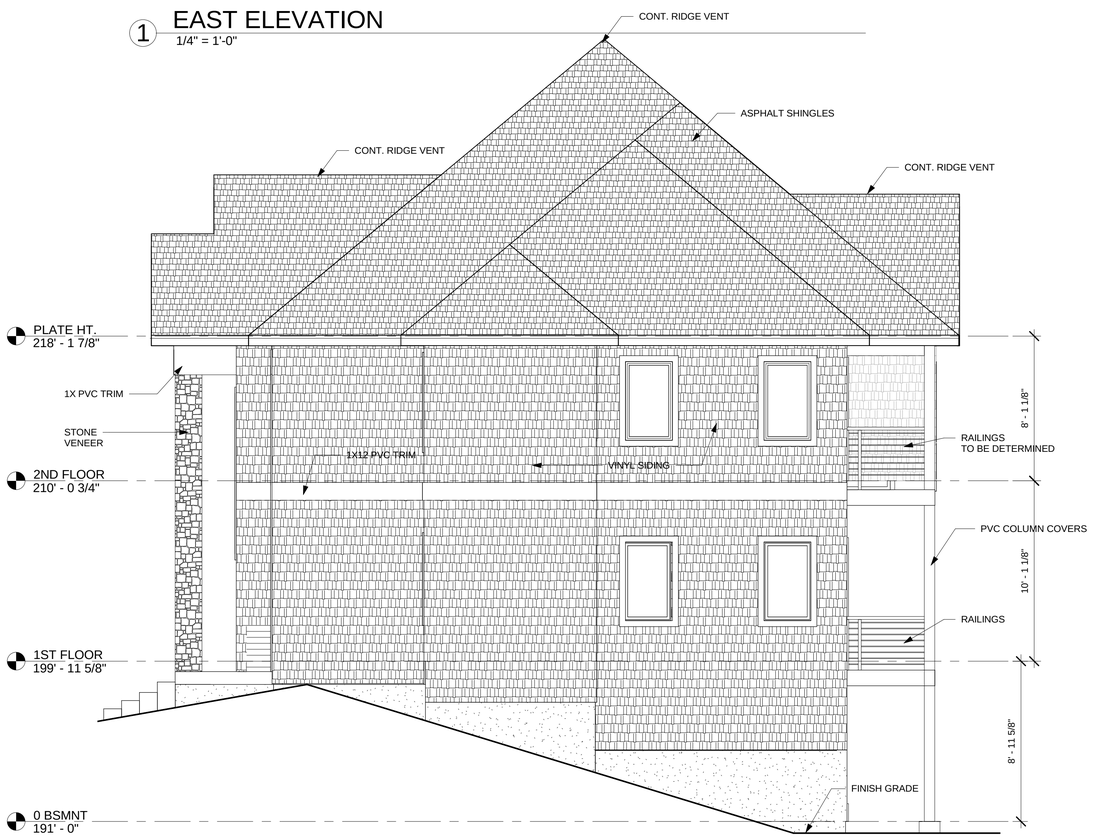

2 NORTH ELEVATION
1/4" = 1'-0"

9/16/2020 12:43:33 PM

Stephen Jager, AIA

JAGER
ASSOCIATES LLC

4 Grand View Drive Enfield, CT 06082
860-803-1265 sjsl@aol.com

This document contains confidential information, is an instrument of service and the property of the Architect. It shall not be used on other projects or for the extension of this project without the Architect's written approval.

All products, fixtures, and equipment shall be installed in accordance with manufacturers' installation instructions and all applicable codes.

All dimensions, materials, and specifications are to be verified by the Contractor prior to the commencement of work.

The Contractor shall be responsible for construction means, methods, techniques, sequences, and safety precautions in connection with the work.

PROJECT NAME:

NEW SINGLE FAMILY RESIDENCE

PROJECT ADDRESS:

16 CRESCENT BEACH ROAD
ENFIELD, CT 06082

PROJ NO:

2020.18

ISSUE DATE:

9/16/2020

REVISION DATE:

DRAWING

EXTERIOR ELEVATIONS

A5

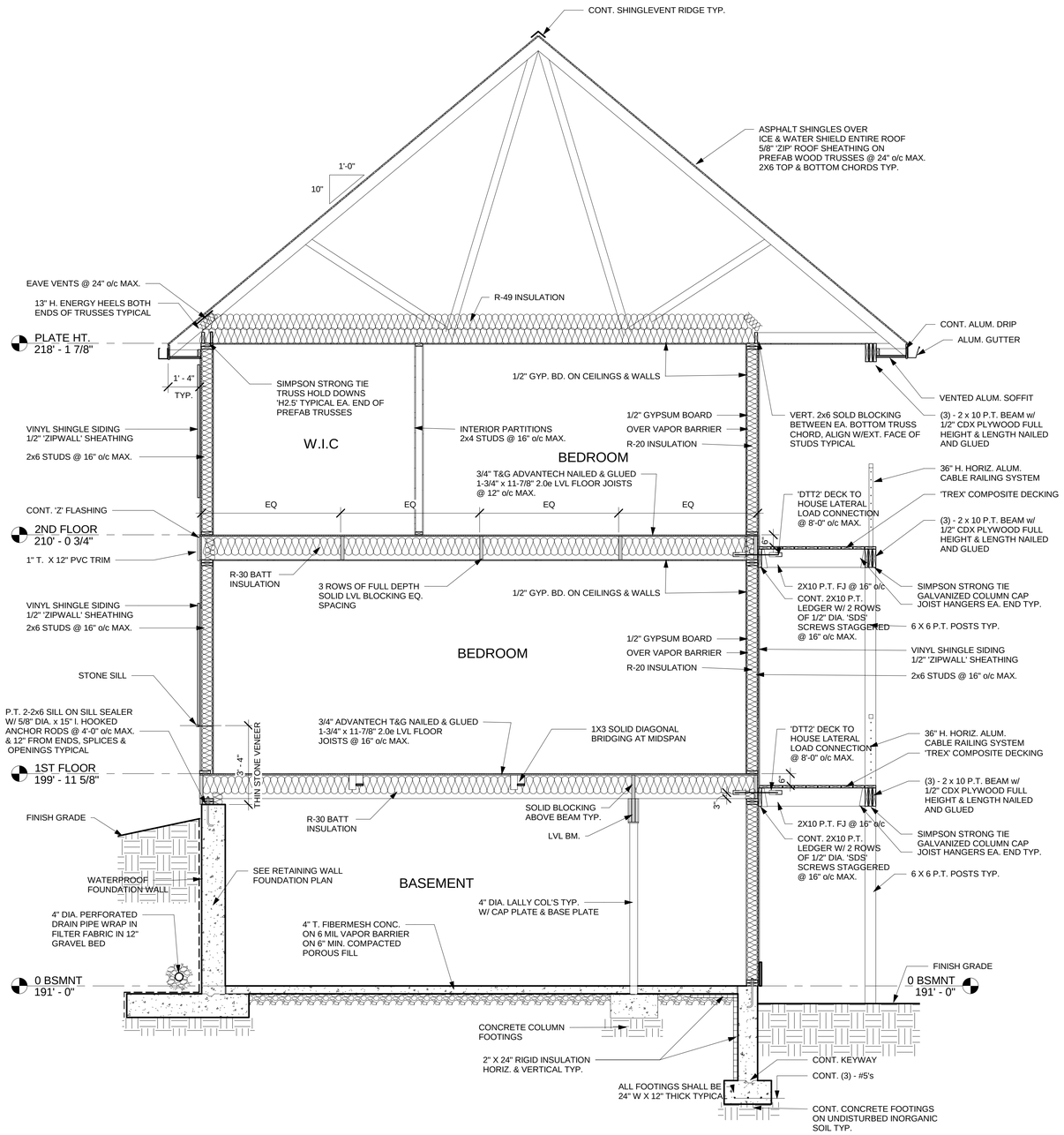

1 SECTION THRU BEDROOMS
3/8" = 1'-0"

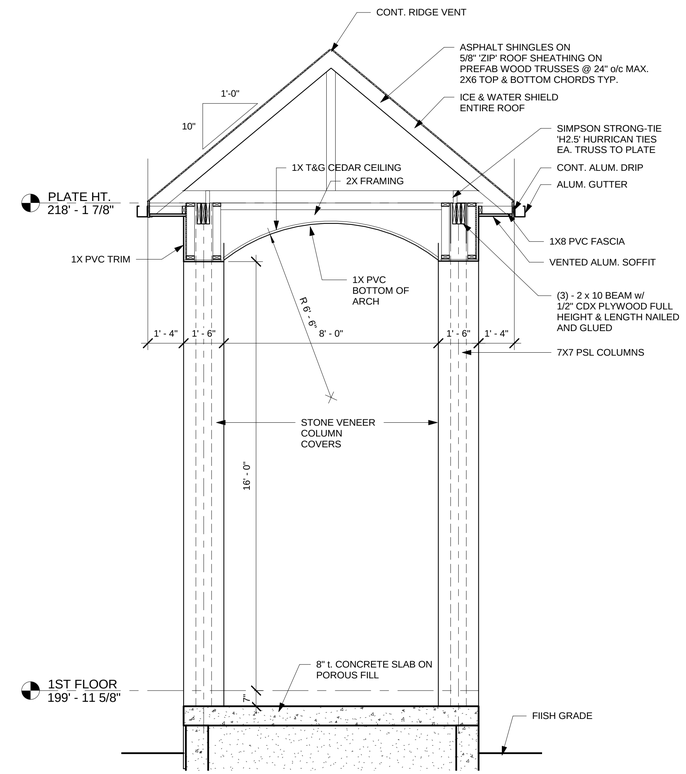

2 SECTION THRU PORCH
3/8" = 1'-0"

Stephen Jager, AIA
JAGER ASSOCIATES LLC
4 Grand View Drive Enfield, CT 06082
860-803-1265 sjsl@aol.com

This document contains confidential information, is an instrument of service and the property of the Architect. It shall not be used on other projects or for the extension of this project without the Architect's written approval.

All products, fixtures, and equipment shall be installed in accordance with manufacturers' installation instructions and all applicable codes.

All dimensions, materials, and specifications are to be verified by the Contractor prior to the commencement of work.

The Contractor shall be responsible for construction means, methods, techniques, sequences, and safety precautions in connection with the work.

PROJECT NAME:
NEW SINGLE FAMILY RESIDENCE

PROJECT ADDRESS:
16 CRESCENT BEACH ROAD
ENFIELD, CT 06082

PROJ NO:
2020.18

ISSUE DATE:
9/16/2020

REVISION DATE:

DRAWING
BUILDING SECTION

A6

9/17/2020 6:12:19 PM

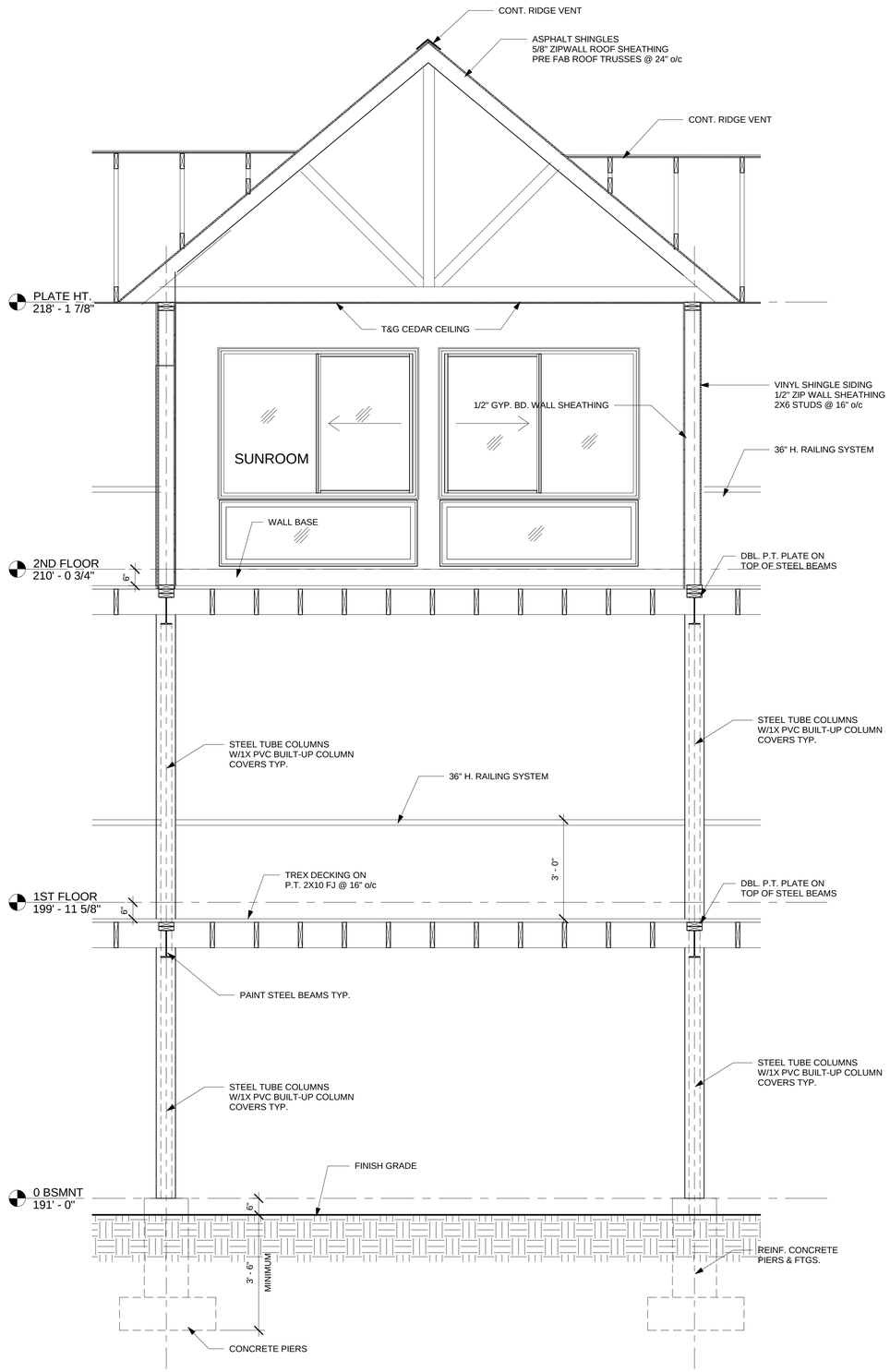

1 SECTION THRU PORCH
1/2" = 1'-0"

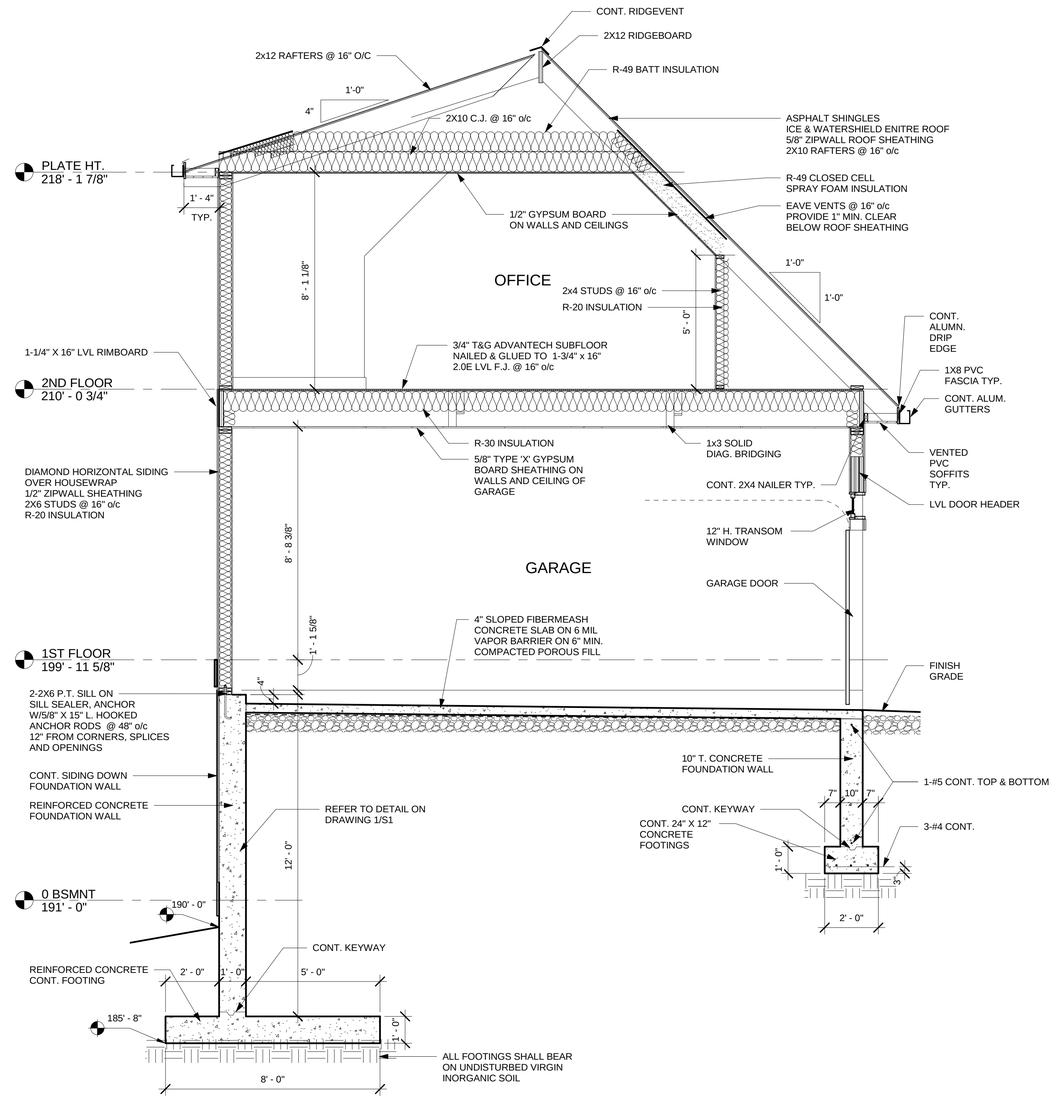

2 SECTION THRU GARAGE
3/8" = 1'-0"

Stephen Jager, AIA

JAGER
ASSOCIATES LLC

4 Grand View Drive Enfield, CT 06082
860-803-1265 sjsl@aol.com

This document contains confidential information, is an instrument of service and the property of the Architect. It shall not be used on other projects or for the extension of this project without the Architect's written approval.

All products, fixtures, and equipment shall be installed in accordance with manufacturers' installation instructions and all applicable codes.

All dimensions, materials, and specifications are to be verified by the Contractor prior to the commencement of work.

The Contractor shall be responsible for construction means, methods, techniques, sequences, and safety precautions in connection with the work.

PROJECT NAME:

NEW SINGLE FAMILY RESIDENCE

PROJECT ADDRESS:

16 CRESCENT BEACH ROAD
ENFIELD, CT 06082

PROJ NO:

2020.18

ISSUE DATE:

9/16/2020

REVISION DATE:

DRAWING

BUILDING SECTION

A7

9/17/2020 6:11:22 PM

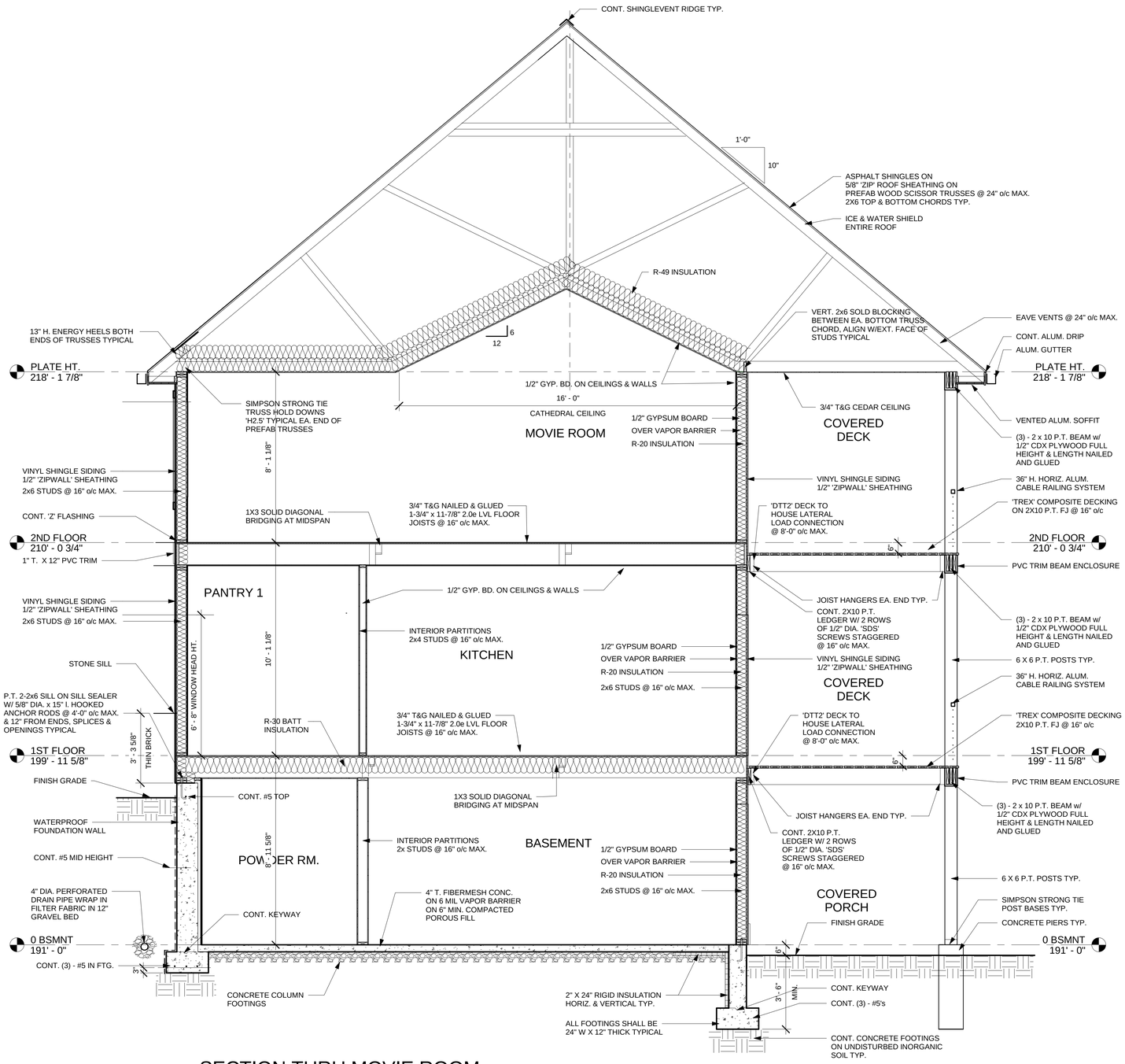

1 SECTION THRU MOVIE ROOM

3/8" = 1'-0"

Stephen Jager, AIA

JAGER
ASSOCIATES LLC

4 Grand View Drive Enfield, CT 06082
860-803-1265 sjsl@aol.com

This document contains confidential information, is an instrument of service and the property of the Architect. It shall not be used on other projects or for the extension of this project without the Architect's written approval.

All products, fixtures, and equipment shall be installed in accordance with manufacturers' installation instructions and all applicable codes.

All dimensions, materials, and specifications are to be verified by the Contractor prior to the commencement of work.

The Contractor shall be responsible for construction means, methods, techniques, sequences, and safety precautions in connection with the work.

PROJECT NAME:

NEW SINGLE FAMILY RESIDENCE

PROJECT ADDRESS:

16 CRESCENT BEACH ROAD
ENFIELD, CT 06082

PROJ NO:

2020.18

ISSUE DATE:

9/16/2020

REVISION DATE:

DRAWING

BUILDING SECTION

A8

9/17/2020 6:11:08 PM

4 BRACKET DETAIL 2

3" = 1'-0"

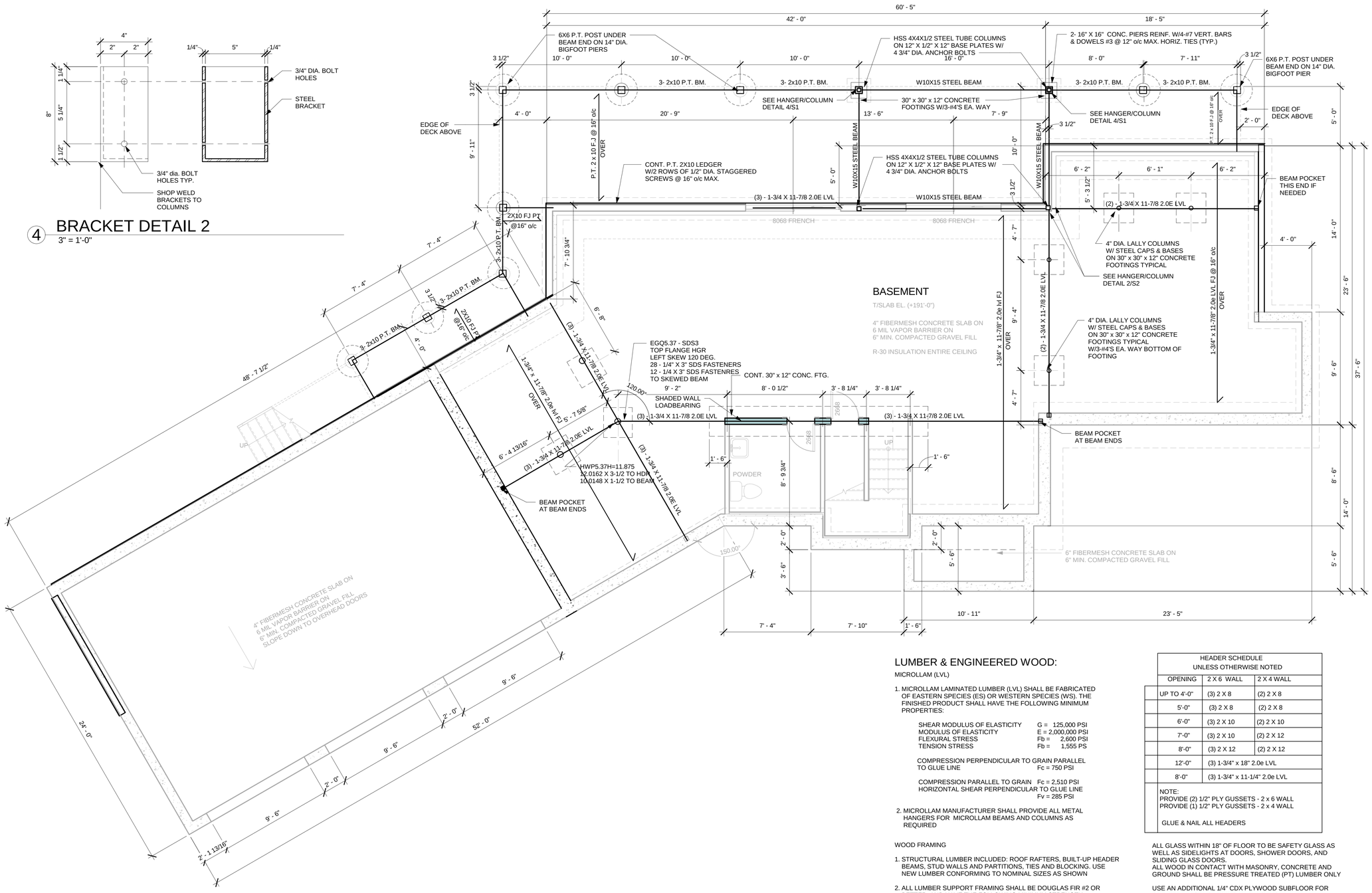

1 1ST FLOOR FRAMING PLAN

1/4" = 1'-0"

LUMBER & ENGINEERED WOOD:

MICROLLAM (LVL)

1. MICROLLAM LAMINATED LUMBER (LVL) SHALL BE FABRICATED OF EASTERN SPECIES (ES) OR WESTERN SPECIES (WS). THE FINISHED PRODUCT SHALL HAVE THE FOLLOWING MINIMUM PROPERTIES:

SHEAR MODULUS OF ELASTICITY	G = 125,000 PSI
MODULUS OF ELASTICITY	E = 2,000,000 PSI
FLEXURAL STRESS	Fb = 2,600 PSI
TENSION STRESS	Fb = 1,555 PS
COMPRESSION PERPENDICULAR TO GRAIN PARALLEL TO GLUE LINE	Fc = 750 PSI
COMPRESSION PARALLEL TO GRAIN	Fc = 2,510 PSI
HORIZONTAL SHEAR PERPENDICULAR TO GLUE LINE	Fv = 285 PSI

2. MICROLLAM MANUFACTURER SHALL PROVIDE ALL METAL HANGERS FOR MICROLLAM BEAMS AND COLUMNS AS REQUIRED

WOOD FRAMING

1. STRUCTURAL LUMBER INCLUDED: ROOF RAFTERS, BUILT-UP HEADER BEAMS, STUD WALLS AND PARTITIONS, TIES AND BLOCKING. USE NEW LUMBER CONFORMING TO NOMINAL SIZES AS SHOWN

2. ALL LUMBER SUPPORT FRAMING SHALL BE DOUGLAS FIR #2 OR BETTER, AND HAVE THE FOLLOWING MINIMUM STRENGTH PROPERTIES:

MODULUS OF ELASTICITY	E = 1,600,000 PSI
BENDING STRESS	Fb = 650 PSI
COMPRESSION PERPENDICULAR TO GRAIN	Fc = 625 PSI
COMPRESSION PARALLEL TO GRAIN	Fc = 1,400 PSI
HORIZONTAL SHEAR	Fv = 95 PSI
TENSION PARALLEL TO GRAIN	Ft = 500 PSI

3. PANEL SPACING: 1/16" AT ENDS - 1/8" AT EDGES UNLESS OTHERWISE NOTED STAGGER JOINTS

4. STRUCTURAL PLYWOOD SHALL CONFORM TO REQUIREMENTS OF AMERICAN PLYWOOD ASSOCIATION (APA) EXPOSURE

HEADER SCHEDULE
UNLESS OTHERWISE NOTED

OPENING	2 X 6 WALL	2 X 4 WALL
UP TO 4'-0"	(3) 2 X 8	(2) 2 X 8
5'-0"	(3) 2 X 8	(2) 2 X 8
6'-0"	(3) 2 X 10	(2) 2 X 10
7'-0"	(3) 2 X 10	(2) 2 X 12
8'-0"	(3) 2 X 12	(2) 2 X 12
12'-0"	(3) 1-3/4" x 18" 2.0e LVL	
8'-0"	(3) 1-3/4" x 11-1/4" 2.0e LVL	

NOTE:
PROVIDE (2) 1/2" PLY GUSSETS - 2 x 6 WALL
PROVIDE (1) 1/2" PLY GUSSETS - 2 x 4 WALL

GLUE & NAIL ALL HEADERS

ALL GLASS WITHIN 18" OF FLOOR TO BE SAFETY GLASS AS WELL AS SIDELIGHTS AT DOORS, SHOWER DOORS, AND SLIDING GLASS DOORS.
ALL WOOD IN CONTACT WITH MASONRY, CONCRETE AND GROUND SHALL BE PRESSURE TREATED (PT) LUMBER ONLY

USE AN ADDITIONAL 1/4" CDX PLYWOOD SUBFLOOR FOR QUARRY AND/OR CERAMIC TILE FLOORS

9/16/2020 12:59:34 PM

Stephen Jager, AIA
JAGER ASSOCIATES LLC
4 Grand View Drive Enfield, CT 06082
860-803-1265 sjsl@aol.com

This document contains confidential information, is an instrument of service and the property of the Architect. It shall not be used on other projects or for the extension of this project without the Architect's written approval.

All products, fixtures, and equipment shall be installed in accordance with manufacturers' installation instructions and all applicable codes.

All dimensions, materials, and specifications are to be verified by the Contractor prior to the commencement of work.

The Contractor shall be responsible for construction means, methods, techniques, sequences, and safety precautions in connection with the work.

PROJECT NAME:
NEW SINGLE FAMILY RESIDENCE

PROJECT ADDRESS:
16 CRESCENT BEACH ROAD
ENFIELD, CT 06082

PROJ NO:
2020.18

ISSUE DATE:
9/16/2020

REVISION DATE:

DRAWING
1ST FLOOR FRAMING PLAN

S1

2 BRACKET DETAIL 1

3" = 1'-0"

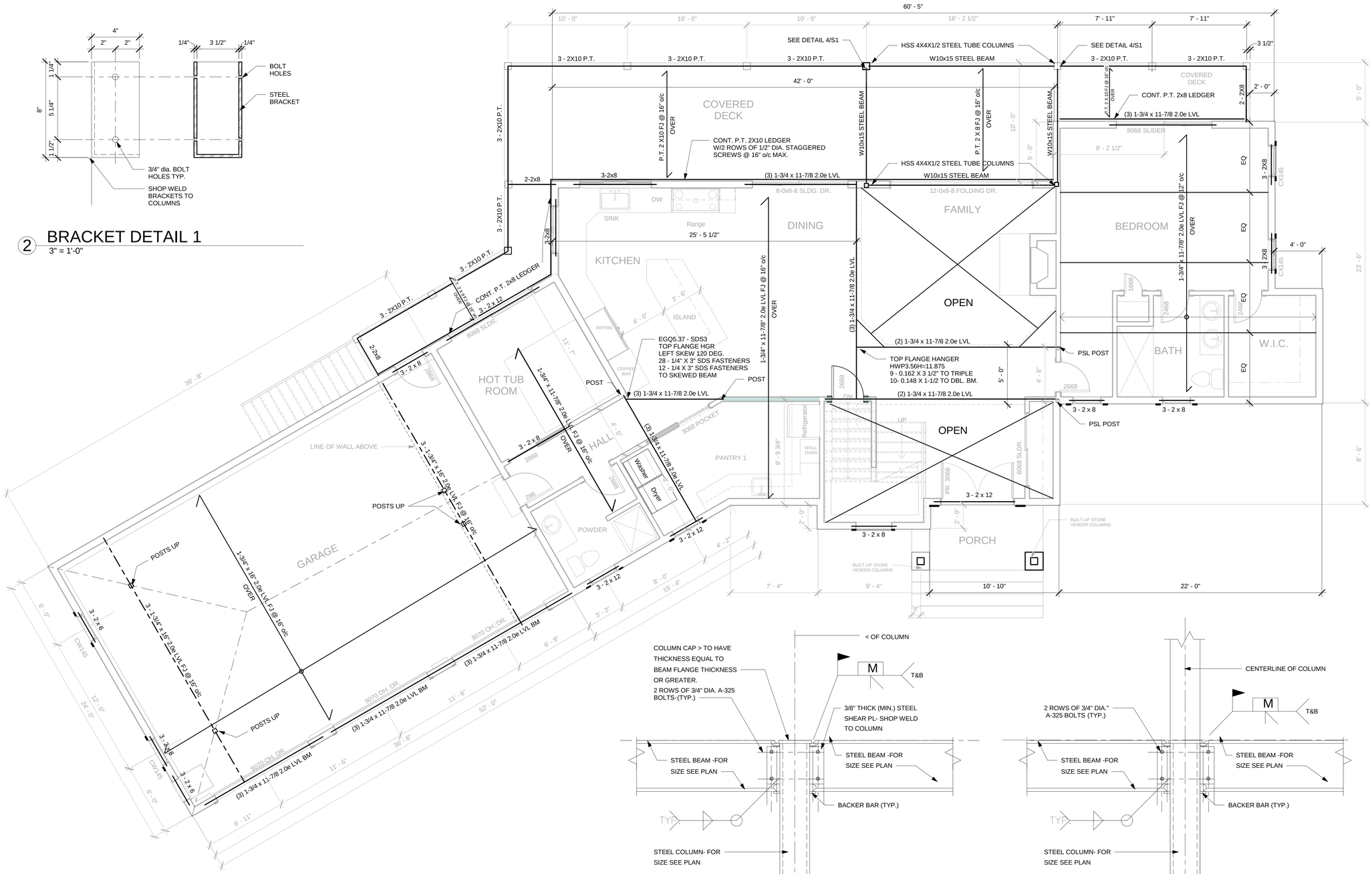

1 2ND FLOOR FRAMING PLAN

1/4" = 1'-0"

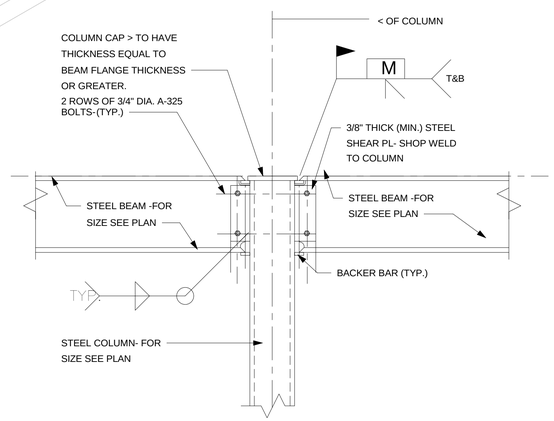

TYPICAL BEAM TO TUBE COLUMN MOMENT CONNECTION DETAIL AT 2ND FLOOR LEVEL

NOT TO SCALE

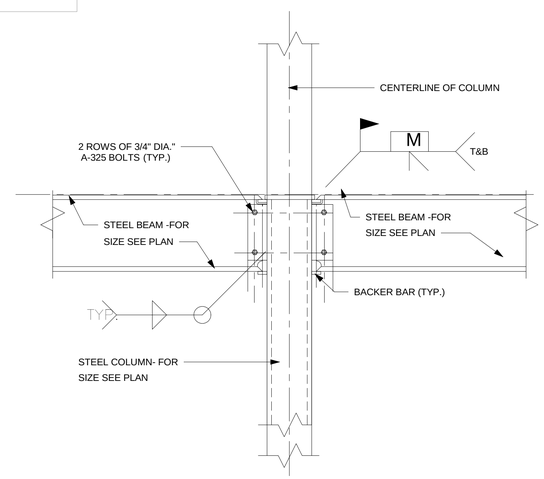

TYPICAL BEAM TO TUBE COLUMN MOMENT CONNECTION DETAIL AT 1ST FLOOR LEVEL

NOT TO SCALE

3 STEEL CONNECTIONS

1" = 1'-0"

Stephen Jager, AIA

JAGER ASSOCIATES LLC

4 Grand View Drive Enfield, CT 06082
860-803-1265 sjsl@aol.com

This document contains confidential information, is an instrument of service and the property of the Architect. It shall not be used on other projects or for the extension of this project without the Architect's written approval.

All products, fixtures, and equipment shall be installed in accordance with manufacturers' installation instructions and all applicable codes.

All dimensions, materials, and specifications are to be verified by the Contractor prior to the commencement of work.

The Contractor shall be responsible for construction means, methods, techniques, sequences, and safety precautions in connection with the work.

PROJECT NAME:

NEW SINGLE FAMILY RESIDENCE

PROJECT ADDRESS:

16 CRESCENT BEACH ROAD
ENFIELD, CT 06082

PROJ NO:

2020.18

ISSUE DATE:

9/16/2020

REVISION DATE:

DRAWING

2ND FLOOR FRAMING PLAN

S2

9/16/2020 1:03:05 PM

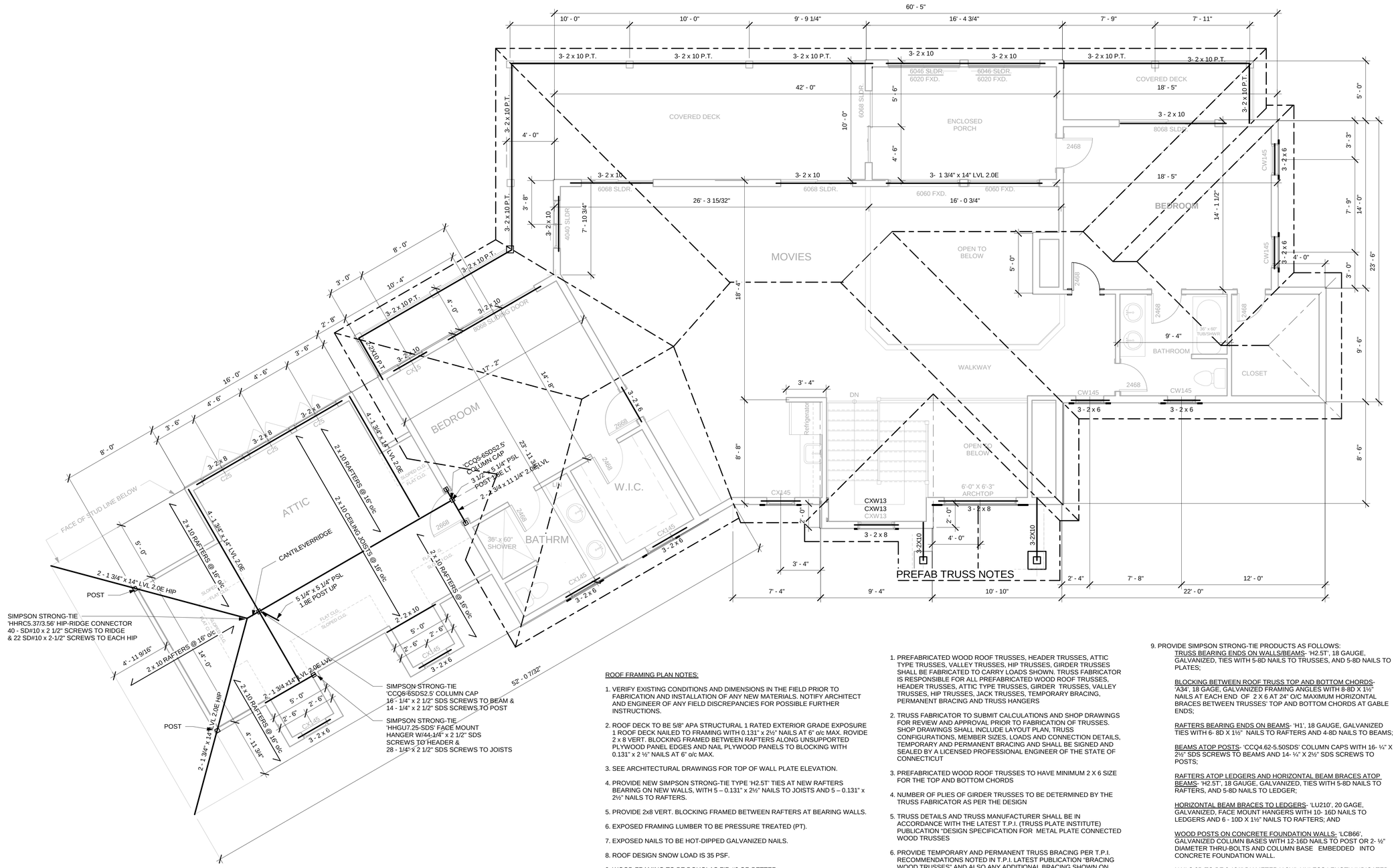

1 ROOF FRAMING PLAN
1/4" = 1'-0"

ROOF FRAMING PLAN NOTES:

1. VERIFY EXISTING CONDITIONS AND DIMENSIONS IN THE FIELD PRIOR TO FABRICATION AND INSTALLATION OF ANY NEW MATERIALS. NOTIFY ARCHITECT AND ENGINEER OF ANY FIELD DISCREPANCIES FOR POSSIBLE FURTHER INSTRUCTIONS.

2. ROOF DECK TO BE 5/8" APA STRUCTURAL 1 RATED EXTERIOR GRADE EXPOSURE 1 ROOF DECK NAILED TO FRAMING WITH 0.131" x 2½" NAILS AT 6" o/c MAX. ROVIDE 2 x 8 VERT. BLOCKING FRAMED BETWEEN RAFTERS ALONG UNSUPPORTED PLYWOOD PANEL EDGES AND NAIL PLYWOOD PANELS TO BLOCKING WITH 0.131" x 2 ½" NAILS AT 6" o/c MAX.

3. SEE ARCHITECTURAL DRAWINGS FOR TOP OF WALL PLATE ELEVATION.

4. PROVIDE NEW SIMPSON STRONG-TIE TYPE 'H2.5T' TIES AT NEW RAFTERS BEARING ON NEW WALLS, WITH 5 – 0.131" x 2½" NAILS TO JOISTS AND 5 – 0.131" x 2½" NAILS TO RAFTERS.

5. PROVIDE 2x8 VERT. BLOCKING FRAMED BETWEEN RAFTERS AT BEARING WALLS.

6. EXPOSED FRAMING LUMBER TO BE PRESSURE TREATED (PT).

7. EXPOSED NAILS TO BE HOT-DIPPED GALVANIZED NAILS.

8. ROOF DESIGN SNOW LOAD IS 35 PSF.

9. WOOD FRAMING TO BE DOUGLAS FIR #2 OR BETTER.

1. PREFABRICATED WOOD ROOF TRUSSES, HEADER TRUSSES, ATTIC TYPE TRUSSES, VALLEY TRUSSES, HIP TRUSSES, GIRDER TRUSSES SHALL BE FABRICATED TO CARRY LOADS SHOWN. TRUSS FABRICATOR IS RESPONSIBLE FOR ALL PREFABRICATED WOOD ROOF TRUSSES, HEADER TRUSSES, ATTIC TYPE TRUSSES, GIRDER TRUSSES, VALLEY TRUSSES, HIP TRUSSES, JACK TRUSSES, TEMPORARY BRACING, PERMANENT BRACING AND TRUSS HANGERS

2. TRUSS FABRICATOR TO SUBMIT CALCULATIONS AND SHOP DRAWINGS FOR REVIEW AND APPROVAL PRIOR TO FABRICATION OF TRUSSES. SHOP DRAWINGS SHALL INCLUDE LAYOUT PLAN, TRUSS CONFIGURATIONS, MEMBER SIZES, LOADS AND CONNECTION DETAILS, TEMPORARY AND PERMANENT BRACING AND SHALL BE SIGNED AND SEALED BY A LICENSED PROFESSIONAL ENGINEER OF THE STATE OF CONNECTICUT

3. PREFABRICATED WOOD ROOF TRUSSES TO HAVE MINIMUM 2 X 6 SIZE FOR THE TOP AND BOTTOM CHORDS

4. NUMBER OF PLIES OF GIRDER TRUSSES TO BE DETERMINED BY THE TRUSS FABRICATOR AS PER THE DESIGN

5. TRUSS DETAILS AND TRUSS MANUFACTURER SHALL BE IN ACCORDANCE WITH THE LATEST T.P.I. (TRUSS PLATE INSTITUTE) PUBLICATION "DESIGN SPECIFICATION FOR METAL PLATE CONNECTED WOOD TRUSSES

6. PROVIDE TEMPORARY AND PERMANENT TRUSS BRACING PER T.P.I. RECOMMENDATIONS NOTED IN T.P.I. LATEST PUBLICATION "BRACING WOOD TRUSSES" AND ALSO ANY ADDITIONAL BRACING SHOWN ON PLANS.

7. UNLESS NOTED OTHERWISE, ALL TRUSSES SHALL BE DESIGNED FOR THE FOLLOWING LOADS PLUS SELF-WEIGHT: BOTTOM CHORD DEAD LOAD = 10 LBS PER SQ FT; TOP CHORD DEAD LOAD = 12 LBS PER SQ FT; AND TOP CHORD LIVE LOAD = 40 LBS PER SQ FT .

8. FOR CONFIGURATION OF PREFABRICATED WOOD ROOF TRUSSES, WORKING POINT DIMENSIONS, AND BOTTOM OF PREFABRICATED WOOD TRUSS BOTTOM CHORDS ELEVATIONS, SEE ARCHITECTURAL DRAWINGS.

9. PROVIDE SIMPSON STRONG-TIE PRODUCTS AS FOLLOWS:

TRUSS BEARING ENDS ON WALLS/BEAMS- 'H2.5T', 18 GAUGE, GALVANIZED, TIES WITH 5-8D NAILS TO TRUSSES, AND 5-8D NAILS TO PLATES;

BLOCKING BETWEEN ROOF TRUSS TOP AND BOTTOM CHORDS- 'A34', 18 GAGE, GALVANIZED FRAMING ANGLES WITH 8-8D X 1½" NAILS AT EACH END OF 2 X 6 AT 24" O/C MAXIMUM HORIZONTAL BRACES BETWEEN TRUSSES' TOP AND BOTTOM CHORDS AT GABLE ENDS;

RAFTERS BEARING ENDS ON BEAMS- 'H1', 18 GAUGE, GALVANIZED TIES WITH 6- 8D X 1½" NAILS TO RAFTERS AND 4-8D NAILS TO BEAMS;

BEAMS ATOP POSTS- 'CCQ4.62-5.50SDS' COLUMN CAPS WITH 16- ¼" X 2½" SDS SCREWS TO BEAMS AND 14- ¼" X 2½" SDS SCREWS TO POSTS;

RAFTERS ATOP LEDGERS AND HORIZONTAL BEAM BRACES ATOP BEAMS- 'H2.5T', 18 GAUGE, GALVANIZED, TIES WITH 5-8D NAILS TO RAFTERS, AND 5-8D NAILS TO LEDGER;

HORIZONTAL BEAM BRACES TO LEDGERS- 'LU210', 20 GAGE, GALVANIZED, FACE MOUNT HANGERS WITH 10- 16D NAILS TO LEDGERS AND 6 - 10D X 1½" NAILS TO RAFTERS; AND

WOOD POSTS ON CONCRETE FOUNDATION WALLS- 'LCB66', GALVANIZED COLUMN BASES WITH 12-16D NAILS TO POST OR 2- ½" DIAMETER THRU-BOLTS AND COLUMN BASE EMBEDDED INTO CONCRETE FOUNDATION WALL.

NAILS 8D TO BE 0.131" DIAMETER X 2½", UNLESS LENGTH INDICATED OTHERWISE, 10 D NAILS TO BE 0.148" DIAMETER X 3", UNLESS LENGTH INDICATED OTHERWISE, & 16D NAILS TO BE 0.162" DIAMETER X 3½";

9/16/2020 1:06:09 PM

Stephen Jager, AIA

JAGER ASSOCIATES LLC

4 Grand View Drive Enfield, CT 06082
860-803-1265 sjsl@aol.com

This document contains confidential information, is an instrument of service and the property of the Architect. It shall not be used on other projects or for the extension of this project without the Architect's written approval.

All products, fixtures, and equipment shall be installed in accordance with manufacturers' installation instructions and all applicable codes.

All dimensions, materials, and specifications are to be verified by the Contractor prior to the commencement of work.

The Contractor shall be responsible for construction means, methods, techniques, sequences, and safety precautions in connection with the work.

PROJECT NAME:

NEW SINGLE FAMILY RESIDENCE

PROJECT ADDRESS:

16 CRESCENT BEACH ROAD
ENFIELD, CT 06082

PROJ NO:

2020.18

ISSUE DATE:

9/16/2020

REVISION DATE:

DRAWING

ROOF FRAMING PLAN

S3