Proposed
AAA Building
at Enfield Commons

25 Hazard Avenue
Enfield, Connecticut

Inland Wetlands & Watercourses, Special Use and Site Plan Applications

July 6, 2020

Revised thru October 6, 2020

PH#

File IW #

DEVELOPMENT TEAM

Property Owner	Paramount Commons at Enfield, LLC 1195 Route 70 Suite 2000 Lakewood, NJ 08701
Applicant/Developer	AAA Club Alliance, LLC 1 River Place Wilmington, DE 19801
Legal Counsel	Daniel J. Ivler, Esquire
Civil Engineer	F. A. Hesketh & Associates, Inc.
Landscape Architect	F. A. Hesketh & Associates, Inc.
Architect / MEP	Progressive AE
Surveyor	F. A. Hesketh & Associates, Inc.

LIST OF DRAWINGS

	Title Sheet
MA-1	Master Layout Plan
LA-1	Layout Plan
LS-1 and LS-2	Landscape Plan
GR-1	Grading and Soil Erosion & Sediment Control Plan
UT-1	Utility and Drainage Plan
E100	Site Plan - Electrical
SD-1 thru SD-3	Site Details
NT-1	Notes
PS-1	Property Survey
SFP-9	Schematic Floor Plan
SEL-3	Schematic Building Elevations

David S. Ziaks P.E. #13336

F. A. Hesketh & Associates, Inc.
3 Creamery Brook, East Granby, CT 06026
Phone (860) 653-8000 · Fax (860) 844-8600
Civil & Traffic Engineers · Surveyors · Planners · Landscape Architects

G:\2019\19001 – Enfield Commons\AAA VE Redesign\Submission\AAAtp103.dwg, TP-1, Oct 08, 2020 – 12:03:59 PM

ZONING DATA TABULATION

Zone: BR (Business Regional Shopping District)

Existing Uses: Retail, Restaurant, Fast Food Restaurant

Proposed New Uses: Business, Motor Vehicle Repair Garage (Special Permit), Restaurant with Drive-Thru (Special Permit)

Zoning Requirement	Section	Required	Existing	Proposed	Variance
Minimum Lot Area	5.10	5 Acres	33.02 Acres	33.02 Acres	No
Minimum Lot Width	5.10	N/A	287.26 Feet	287.26 Feet	No
Minimim Lot Frontage	5.10	250 Feet	1,268 Feet	1,268 Feet	No
Minimum Front Setback	5.10	35 Feet	75 Feet	75 Feet	No
Minimum Side Setback	5.10	30 Feet	115.42 Feet	115.42 Feet	No
Minimum Rear Setback	5.10	30 Feet	95.56 Feet	95.56 Feet	No
Maximum Building Height	5.10	72 Feet	<25 Feet / 1 Story	<25 Feet / 1 Story	No
Maximum Building Coverage	5.10	45 Percent	21.6 Percent	22.3 Percent	No
Max. Impervious Coverage	5.10	65 Percent	71.9 Percent	69.9 Percent	Existing Non-Conformity (1)
Minimum Gross Landscape	10.10.7.B.i	15 Percent	- - - - -	- - - - -	Existing Non-Conformity (2)
Minimum Parking Spaces	10.10.2	1,334 Spaces	-------	1,348 Spaces	No

Footnote:

1. The Shopping Center is an existing Non-Conformity with regards to Maximum Impervious Coverage in Section 5.10. There will be a decrease in Impervious Coverage of 2 Percent with this Application.
2. The Shopping Center is an existing Non-Conforming Use with regards to Section 10.10.7. There is an increase of approximately 30,800 s.f. of Gross Parking Landscape Area with this Application.

PARKING TABULATION

	Use	Parking Requirement	Building Area	Gross Floor Area	Required Parking
Enfield Commons (1)	Shopping Center	4 spaces per 1,000 s.f.	236,313	218,191	873
Ocean State (1)	Shopping Center	4 spaces per 1,000 s.f.	22,775	22,775	92
Moe's (3)	Fast Food Restaurant	1 space per 75 s.f.	2,769	2,769	37
Olive Garden (2)	Restaurant	1 space per 1,000 s.f.	9,230	6,211	94
Red Robin (1)	Restaurant	1 space per 1,000 s.f.	6,348	4,582	69
Aspen Dental (1)	Shopping Center	4 spaces per 1,000 s.f.	3,200	3,046	13
Chick-Fil-A (4)	Fast Food Restaurant	1 space per 3 seats	4,891	131 seats	44
Storage	Shopping Center	4 spaces per 1,000 s.f.	75	0	0
AAA Office	Business Services	1 space per 250 s.f.	4,900	4,900	18
AAA Service	Automotive	6 spaces per Service Bay	6,100	8 Bays	48
New Multi-Tenant Building	Restaurant	1 space per 1,000 s.f.	6,986	4,541 (5)	46
	Total Required				1,334

Footnotes to

1. G.F.A. or "Gross Usable Floor Area" determined through measurements taken during building walk-through on 1/17/2014. Figures include only areas accessible to the public. Total G.F.A. may be lower than indicated in chart.
2. G.F.A. or "Gross Usable Floor Area" determined through measurements taken during building walk-through on 4/21/2015. Figures include only areas accessible to the public. Total G.F.A. may be lower that included in chart.
3. Parking required for Moe's, as a Fast Food Restaurant, has been calculated at a rate of 1 space for every 75 s.f. of Gross Leasable Floor Area per the Town of Enfield Zoning Regulations.
4. Parking required for Chick-Fil-A, as a Fast Food Restaurant, has been calculated at a rate of 1 space for every 3 patron seats per the Town of Enfield Zoning Regulations.
5. Assume 65% Gross Usable Floor Area for New Multi-Tenant Building.

F. A. Hesketh & Associates, Inc.
3 Creamery Brook, East Granby, CT 06026
Phone (860) 653-8000 Fax (860) 844-8600
Civil & Traffic Engineers - Surveyors - Planners - Landscape Architects www.fahesketh.com - mail@fahesketh.com

Revisions:

No.	Date	Description
1	08-28-2020	Staff comments

MASTER PLAN
PREPARED FOR
ENFIELD COMMONS
HAZARD AVENUE
ENFIELD, CONNECTICUT

Date: 07-06-2020 | Drawn by: KLL | Job no: 19001
Scale: 1" = 80' | Checked by: DSZ | Sheet no: 1 OF 1

MA-1

Q:\2019\19001 - Enfield Commons\AAA VE Redesign\Submission\MA-mst102.dwg, MA-1, Sep 03, 2020 - 2:14:05 PM

SIGNAGE LEGEND

Symbol	Graphic	Catalog Number	Quantity
A	RESERVED PARKING PERMIT REQUIRED	New Reserved Sign (CT Building Code)	2
B	VAN ACCESSIBLE	31-0648	2
C	STOP	31-0552	3
D	ELECTRIC VEHICLE CHARGING STATION	Custom (12" x 18")	2
E		41-4810	1

PAVEMENT MARKING LEGEND

Symbol	Type
SWL	Painted Single White Line
SBL	Painted Single Blue Line
SYL	Painted Single Yellow Line
DYC	Double Yellow Centerlione
PCW	Painted Crosswalk Walk (White)
SB	Painted Stop Bar (White)

SIGNAGE AND PAVEMENT MARKING NOTES

1. Stop bars (SB) shall be painted with white traffic paint (12 inches wide)
2. All standard parking stalls and centerlines shall be painted with white traffic paint (4 inches wide).
3. Traffic control arrows shall be painted with white traffic paint.
4. All accessible parking stalls, aisles and symbols of accessibility shall be painted with blue traffic paint (4 inches wide).
5. Centerlines shall be painted with yellow traffic paint and shall consist of double lines (4 inches wide)
6. Fire lanes and other areas of parking prohibition shall be painted with yellow traffic paint (4 inches wide)
7. All on-site traffic paint shall conform to CT DOT Form 817, Article M.07
8. All pavement markings and signs shall conform to *"Manual On Uniform Traffic Control Devices"*, *"Standard Alphabets For Highway Signs And Pavement Markings"*, CT DOT 817, State Building Code and ADA Requirements and as shown on the details
9. Sign catalog numbers obtained from "Connecticut Department of Transportation, Catalog of Signs", Last Revised 7/3/19. Contractor to confirm sign types prior to installation.
10. Install additional fire lane markings and signage as directed by the Enfield Fire Department Officials.

CURB TYPE LEGEND

Symbol	Type
CIP	Cast-In-Place Concrete Curb
ECC	Extruded Concrete Curb

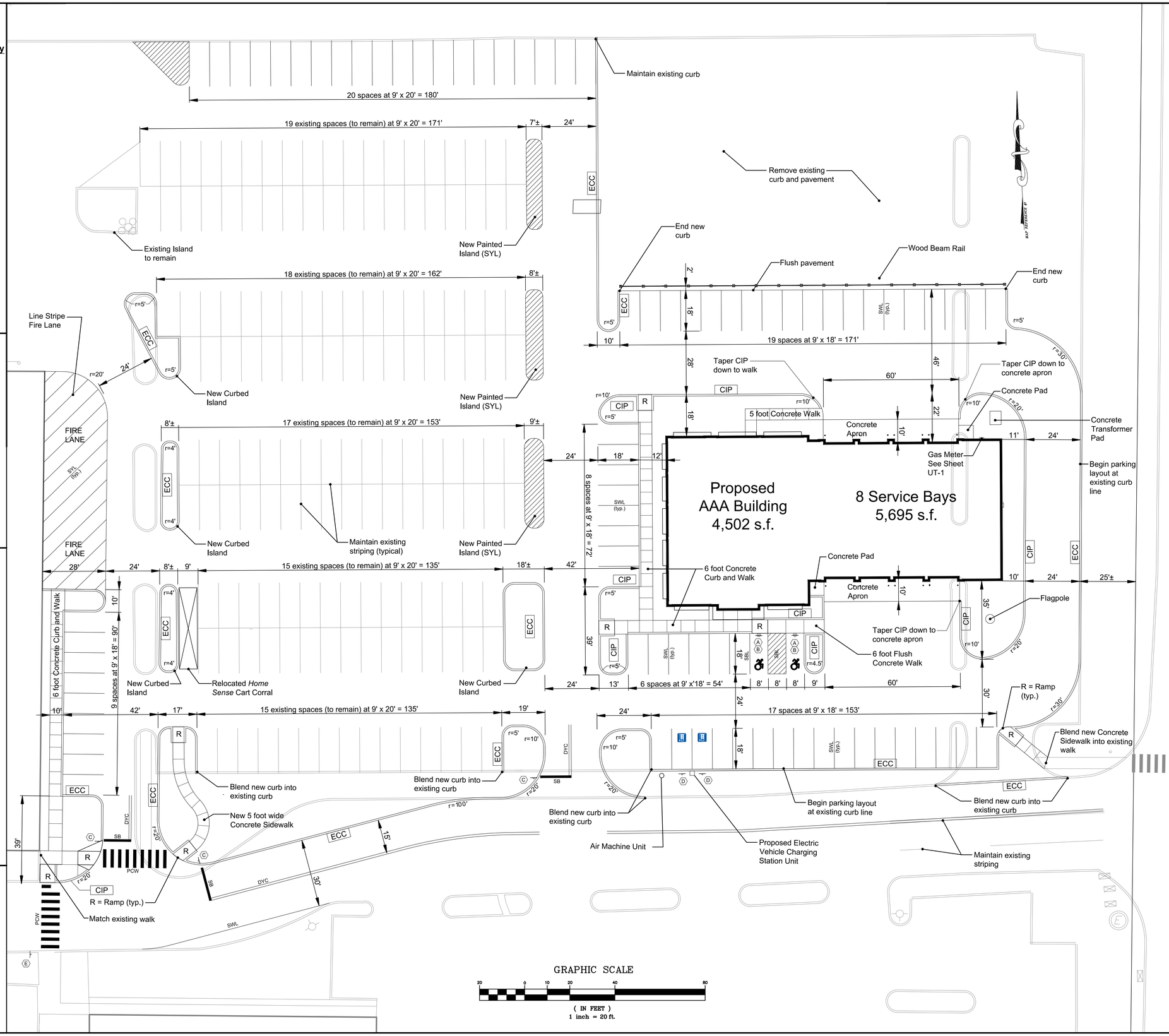

F. A. Hesketh & Associates, Inc.
3 Creamery Brook, East Granby, CT 06026
Civil & Traffic Engineers · Surveyors · Planners · Landscape Architects
Phone (860) 653-8000
Fax (860) 844-8600
e-mail hesketh@snet.net

Revisions:

No.	Date	Description
1	08-28-2020	Staff comments

LAYOUT PLAN
PREPARED FOR
AAA CLUB ALLIANCE, INC.
ENFIELD COMMONS
25 & 39 HAZARD AVENUE
ENFIELD, CONNECTICUT

date: 07-06-2020 | drawn by: KLL | job no: 19001
scale: 1" = 20' | checked by: DSZ | sheet no: 1 OF 1

LA-1

Q:\2019\19001 - Enfield Common\AAA VE Redesign\Submission\AAA1a102.dwg, LA-1, Sep 03, 2020 - 2:05:21 PM

Remove pavement and base material. See Grading Plan for final elevations. Install 4 inches of topsoil and seed with Seed Type 'B'.

Existing streetscape plantings to remain.

FRESHWATER BOULEVARD

Proposed islands to have continuous bark mulch over weed control fabric (typ. of 3)

Proposed island to have continuous bark mulch over weed control fabric.

All foundation plantings to be planted in continuous washed stone mulch over weed control fabric

Continuous bark mulch over weed control fabric

Continuous bark mulch over weed control fabric

Install 2 inched shredded bark mulch over weed control fabric in island expansion area

Install proposed trees in gaps of existing shrubs

Plant	Qty
PVS	2
CVW	2
PVS	2
CVW	1
PVS	1
CVW	2
PVS	2
CVW	1
GTS	1
MPF	2
JCC	15
GTS	1
HHR	60
MPF	2
TOS	2
HHR	50
JCC	2
JHP	13
JCC	2
RR	6
JHP	6
JCC	1
JCC	2
HMN	4
JCC	4
HMN	2
CA	3
JCC	3
CA	10
JCC	3
CA	10
TOS	2
JCC	2
JCC	2
CA	4
JCC	1
TOS	2
JHP	13
POC	8
RR	13
JHP	3
MPF	2
MPF	2
JCC	7
JCC	7
JCC	7
GTS	1
HHR	50
CA	6
HHR	60
GTS	1
JHP	8
JHP	6
JHP	10
JCC	13
JHP	4
ARR	4
ARR	4

GRAPHIC SCALE

20 0 10 20 40 80

(IN FEET)
1 inch = 20 ft.

F. A. Hesketh & Associates, Inc.
3 Creamery Brook, East Granby, CT 06026
Civil & Traffic Engineers · Surveyors · Planners · Landscape Architects
Phone (860) 653-8000
Fax (860) 844-8600
e-mail hesketh@snet.net

No.	Date	Description
1	08-28-2020	Staff comments

Revisions:

LANDSCAPE PLAN
PREPARED FOR
AAA CLUB ALLIANCE, INC.
ENFIELD COMMONS
25 & 39 HAZARD AVENUE
ENFIELD, CONNECTICUT

date: 07-06-2020 | drawn by: KLL | job no: 19001
scale: 1" = 20' | checked by: DSZ | sheet no: 1 OF 2

LS-1

Q:\2019\19001 - Enfield Common\AAA VE Redesign\Submission\AAA1102.dwg, LS-1, Sep. 03, 2020 - 2:03:40 PM

LANDSCAPE SCHEDULE

Deciduous Canopy Trees

Symbol	Botanical Name	Common Name	Quantity	Size	Root	Mature Height
AFA	*Acer x freemanii* 'Autumn Blaze'	Autumn Blaze Maple	8	2 ½ to 3 inch caliper	Balled and Burlapped	50 Feet
GTS	*Gleditsia triacanthos* 'Shademaster'	Shademaster Honeylocust	4	2 ½ to 3 inch caliper	Balled and Burlapped	40 Feet

Deciduous Ornamental Trees

Symbol	Botanical Name	Common Name	Quantity	Size	Root	Mature Height
CVW	*Crataegus viridis* 'Winter King'	Winter King Hawthorn	6	1 ¾ to 2 inch caliper	Balled and Burlapped	25 Feet
MPF	*Malus x* 'Prairiefire'	Prairifire Crabapple	8	1 ¾ to 2 inch caliper	Balled and Burlapped	20 Feet
PVS	*Prunus virginiana* 'Shubert'	Shubert Red Chokecherry	7	1 ¾ to 2 inch caliper	Balled and Burlapped	20 Feet

Evergreen Trees

Symbol	Botanical Name	Common Name	Quantity	Size	Root	Mature Height
TOS	*Thuja occidentalis* 'Smaragd'	Emerald Green Arborvitae	6	6 to 7 foot height	Balled and Burlapped	15 Feet

Deciduous Shrubs

Symbol	Botanical Name	Common Name	Quantity	Size	Root	Mature Height
HMN	*Hydrangea macrophylla* 'Nikko Blue'	Nikko Blue Hydrangea	6	24 to 30 inch height	#3 Container	5 to 6 Feet
POC	*Physocarpus opulifolius 'Coppertina'*	Coppertina Ninebark	8	24 to 30 inch height	#3 Container	6 to 8 Feet
RR	*Rosa x* 'Double Knockout'	Double Red Knockout Rose	19	24 to 30 inch height	#3 Container	4 Feet

Evergreen Shrubs

Symbol	Botanical Name	Common Name	Quantity	Size	Root	Mature Height
JCC	*Juniperus x pfitzeriana* 'Kallay's Compact"	Compact Pfitzer Juniper	82	24 to 30 inch spread	#3 Container	4 Feet
JHP	*Juniperus horiz.* 'Plumosa Compacta'	Andorra Juniper	63	24 to 30 inch spread	#3 Container	2 Feet

Grasses and Groundcovers

Symbol	Botanical Name	Common Name	Quantity	Size	Root	Mature Height
CA	*Calamagrostis acutifolia* 'Karl Foerster"	Karl Foerster Reed Grass	31	18 to 24 inch height	#1 Container	5 to 6 Feet
HHR	*Hemerocallis x* 'Happy Returns'	Happy Returns Daylily	220	12 to 15 inch height	#1 Container	2 Feet

SEED TYPES

Seed Type A

Sun & Shade Mixture

By: Jonathan Green or approved equal

Seed rate: 25 pounds per 9,375 square feet

20% Darkstar II Perennial Ryegrass
20% Carmen Chewings Fescue
15% Deepblue Kentucky Bluegrass
15% Eugene Creeping Red Fescue
15% Yorkshire Dales Perennial Ryegrass
15% Salisbury Chewings Fescue

SEED TYPE "B"

New England Conservation/Wildlife Mix
by New England Wetland Plants, Inc.
www.newp.com
413-548-8000

Application Rate: 25 lbs per 1,750 square feet

Virginia Wild Rye *(Elymus virginicus)*, Little Bluestem *(Schizachyrium scoparium)*, Big Bluestem *(Andropogon gerardii)*, Creeping Red Fescue *(Festuca rubra)*, Switch Grass *(panicum virgatum)*, Partridge Pea *(Chamaecrista fasculata)*, Deer Tongue *(Panicum clandestinum)*, Indian Grass *(Sorghastrum nutans)*, Ox Eye Sunflower *(Heliopsis helianthoides)*, Common Milkweed *(Asclepias syriaca)*, Spotted Joe Pye Weed *(Eupatorium maculatum)*, Grass Leaved Goldenrod *(Euthami graminifolia)*, Blue Vervain *(Verbena hastata)*, New England Aster *(Aster novae-angliae)*, Goldenrod *(Solidago juncea)*

LANDSCAPE NOTES

1. All plants shall meet or exceed the specifications of Federal, State and County laws requiring inspection for plant disease and insect control.

2. Plant material shall conform with the "American Standard for Nursery Stock" by the American Association of Nurserymen, Inc. (ANSI Z60.1-2004).

3. All plants shall be certified true to name by the nursery source. Plant names shall be in accordance with "Hortis Third" (1976) by the staff of the Liberty Hyde Bailey Hortorium, Cornell University. One plant from each species shall be tagged with name and size of the plant in accordance with the standards of practice of the American Association of Nurserymen. Botanical names shall take precedence over common names.

4. Plant material shall be typical of their species and/or variety, with a normal habit of growth, sound, healthy and vigorous. They shall be well branched and densely foliated when in leaf, free of disease, insect pest, eggs or larvae. They shall have healthy well-developed root systems. All trees shall have straight single trunks with their main leader intact unless otherwise noted or approved.

5. All landscaped areas to have 2" shredded bark mulch (color: black) over weed control fabric. No weed control fabric in areas of groundcover or perennial plantings.

6. Provide protective covering of plant material during delivery and storage. Root balls shall not be cracked or broken. Do not prune plants prior to delivery. Remove unacceptable plant material immediately from the job site.

7. Plant locations on the Drawings are approximate and are to be used only as a guide. Contractor shall provide all field engineering services to accurately stake out locations for all plants prior to installation. Do not begin excavation until Project Landscape Architect has approved specific layout.

8. If requested by Project Landscape Architect, stake and guy each tree as shown on the applicable Drawings immediately after planting. Keep trees plumb and taut.

9. If requested by Project Landscape Architect, wrap the trunks of all trees spirally from the ground line to above the lowest main branch.

10. Perform all cultural care necessary to properly maintain plant viability and keep planted areas in a neat and orderly condition, including but not limited to:

a. Watering
b. Weed removal
c. Apply lime or sulphur to adjust soil pH to specific plant requirements
d. Restore or reshape earth saucers
e. Pruning
f. Adjust and tighten tree supports to maintain plants at their proper grades and vertical position
g. Replace mulch to maintain proper depth

11. All planted and lawn areas within development area (building and parking areas) to receive an automatic, mechanical irrigation system.

12. A minimum of 4 inches of topsoil shall be placed on all areas of disturbance to be reseeded.

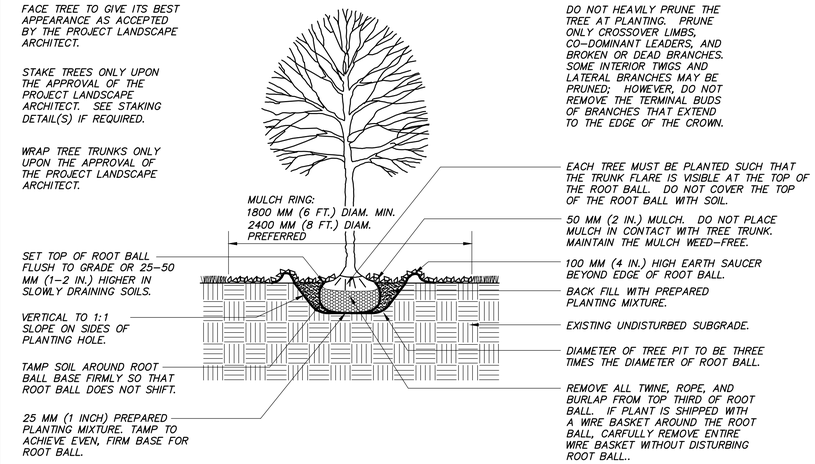

B&B TREE PLANTING DETAIL

N.T.S.

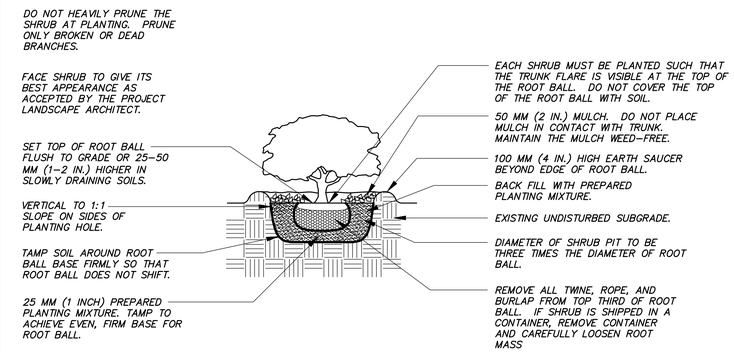

SHRUB PLANTING DETAIL

N.T.S.

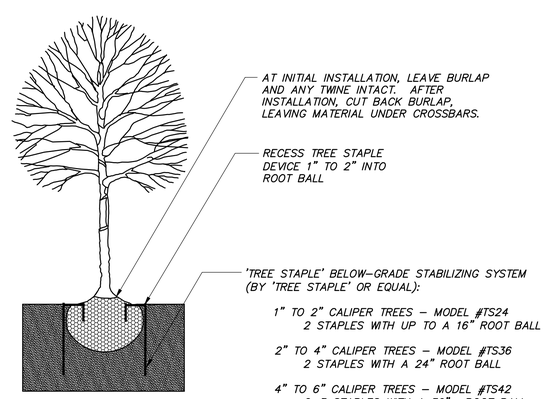

TREE STAKING DETAIL

N.T.S.

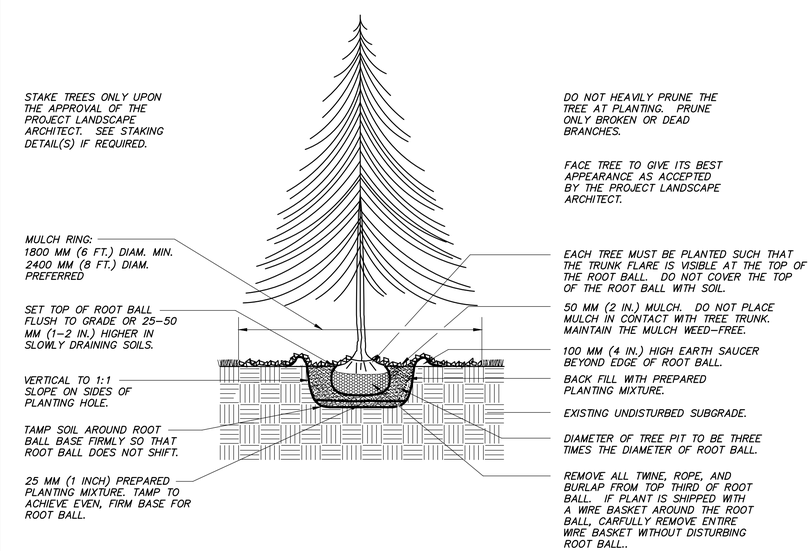

EVERGREEN B&B TREE PLANTING DETAIL

N.T.S.

F. A. Hesketh & Associates, Inc.
3 Creamery Brook, East Granby, CT 06026
Civil & Traffic Engineers · Surveyors · Planners · Landscape Architects
Phone (860) 653-8000
Fax (860) 844-8600
e-mail hesketh@snet.net

Revisions:

No.	Date	Description
1	08-28-2020	Staff comments

LANDSCAPE SCHEDULE, DETAILS AND NOTES

PREPARED FOR

AAA CLUB ALLIANCE, INC.

ENFIELD COMMONS
25 & 39 HAZARD AVENUE
ENFIELD, CONNECTICUT

date: 07-06-2020	drawn by: KLL	job no: 19001	
scale: NO SCALE	checked by: DSZ	sheet no: 2 OF 2	

LS-2

G:\2019\19001 – Enfield Common\AAA VE Redesign\Submission\AAAls102.dwg, LS-2, Sep 03, 2020 – 10:16:16 AM

LEGEND – EXISTING

N/F	= NOW OR FORMERLY
E.L.R.	= ENFIELD LAND RECORD
VOL.	= VOLUME
PG.	= PAGE
CP	= CONTROL POINT
ELEV.	= ELEVATION
SQ.FT.	= SQUARE FEET
	= LIGHT STANDARD
	= SANITARY MANHOLE
	= CATCH BASIN
	= WATERGATE
	= GAS GATE
	= SIGN
— G — G —	= GAS LINE
— W — W —	= WATER LINE
	= TRANSFORMER
	= WATERGATE
GM	= GAS METER
P.O.B.	= POINT OF BEGINNING
P.O.C.	= POINT OF COMMENCEMENT
F/F	= FINISHED FLOOR
— E — E —	= ELECTRIC LINE
	= SANITARY LINE
	= LOOP DETECTOR
	= # OF PARKING SPACES
	= DIRECTION OF FLOW

LEGEND – PROPOSED

	= CATCH BASIN
	= SANITARY MANHOLE
	= DRAINAGE MANHOLE
	= FLARED END SECTION
	= STORM DRAIN CULVERT
100.00	= SPOT GRADE
194	= CONTOUR
	= PROPOSED DRAINAGE DIVIDE

GENERAL GRADING/DRAINAGE NOTES

1. ADJUST FRAMES OF ALL MANHOLES, CATCH BASINS, GAS AND WATER GATES, HAND HOLES, METER BOXES, AND ALL OTHER UTILITY APPURTENANCES TO MATCH PROPOSED FINISH GRADE.
2. SAW CUT AND MILL EXISTING PAVEMENT ALONG LIMITS OF WORK. BLEND ALL NEW WORK TO MATCH EXISTING. SEAL JOINTS WITH HOT ASPHALT MATERIAL, AC-20 OR APPROVED EQUAL.
3. GRADE ALL AREAS TO PRECLUDE PONDING.
4. GRADE TRANSITIONS TO ROADWAYS AND DRIVEWAYS TO MAINTAIN GUTTER FLOW AND PRECLUDE PONDING.

FRESHWATER BOULEVARD

200' FROM BROOK

200' REGULATED AREA LINE

CB TYPE 'C-L'
T.F.=107.50

CB TYPE 'C-L'
T.F.=107.50

F.E.S.
F.L.=108.00

F.E.S.
F.L.=108.00

STORM MH.
T.F.=114.16

TRANS. PAD
ELEV.=115.00

PROPOSED BUILDING F.F. = 115.00

NOTE: 2% MAX. SLOPE AT ADA SPACES

CB TYPE 'C'
T.F.=112.20

MATCH DOOR SILLS

SAWCUT LIMIT (TYP.)

SANITARY PUMP STATION
TF=113.30

1000 GAL. OIL SEPARATOR
T.F.=114.23

CB TYPE 'C'
T.F.=112.60

CB (STC 450i)
T.F.=111.80

100 YEAR FLOOD ELEVATION = 114.0 (NGVD 83)

GRAPHIC SCALE
(IN FEET)
1 inch = 20 ft.

F. A. Hesketh & Associates, Inc.
3 Creamery Brook, East Granby, CT 06026
Civil & Traffic Engineers · Surveyors · Planners · Landscape Architects
Phone (860) 653-8000
Fax: (860) 844-8600
e-mail hesketh@snet.net

No.	Date	Description
1	08-28-2020	Submittal

Revisions:

GRADING PLAN
PREPARED FOR
AAA CLUB ALLIANCE, INC.
ENFIELD COMMONS
25 HAZARD AVENUE
ENFIELD, CONNECTICUT

date: 07-06-2020 | drawn by: RJK | job no: 19001
Scale: 1" = 20' | checked by: DSZ | sheet no: 1 OF 1

GR-1

Q:\2019\19001 – Enfield Common\AAA VE Redesign\Submission\AAAgr104.dwg, GR-1, Sep 03, 2020 – 3:12:32 PM

LEGEND – EXISTING

N/F	= NOW OR FORMERLY
E.L.R.	= ENFIELD LAND RECORD
VOL.	= VOLUME
PG.	= PAGE
CP	= CONTROL POINT
ELEV.	= ELEVATION
SQ.FT.	= SQUARE FEET
	= LIGHT STANDARD
	= SANITARY MANHOLE
	= CATCH BASIN
	= WATERGATE
	= GAS GATE
	= SIGN
— G — G —	= GAS LINE
— W — W —	= WATER LINE
	= TRANSFORMER
	= WATERGATE
GM	= GAS METER
P.O.B.	= POINT OF BEGINNING
P.O.C.	= POINT OF COMMENCEMENT
F/F	= FINISHED FLOOR
— E — E —	= ELECTRIC LINE
	= SANITARY LINE
	= LOOP DETECTOR
	= # OF PARKING SPACES
	= DIRECTION OF FLOW

LEGEND – PROPOSED

	= CATCH BASIN
	= SANITARY MANHOLE
	= DRAINAGE MANHOLE
	= FLARED END SECTION
	= STORM DRAIN CULVERT
x 100.00	= SPOT GRADE
194	= CONTOUR

GENERAL EROSION AND SEDIMENT CONTROL NOTES

1. DISTURBANCE OF SOIL SURFACES IS REGULATED BY STATE LAW. ALL WORK SHALL COMPLY WITH AN APPROVED "EROSION AND SEDIMENT CONTROL PLAN" TO PREVENT OR MINIMIZE SOIL EROSION.
2. THE INSTALLATION AND MAINTENANCE OF EROSION CONTROL DEVICES IS THE RESPONSIBILITY OF THE CONTRACTOR. TOWN OFFICIALS SHALL BE NOTIFIED IN WRITING OF THE NAME, ADDRESS AND TELEPHONE NUMBER OF THE INDIVIDUAL RESPONSIBLE FOR THIS WORK (INCLUDING ANY CHANGES) AT THE REQUIRED PRE-CONSTRUCTION CONFERENCE.
3. THE CONTRACTOR SHALL USE THE "CONNECTICUT GUIDELINES FOR SOIL EROSION AND SEDIMENT CONTROL" (2002), AS AMENDED AS A GUIDE IN CONSTRUCTING THE EROSION AND SEDIMENT CONTROLS INDICATED ON THESE PLANS. THE GUIDELINES MAY BE OBTAINED FROM THE CONNECTICUT DEPARTMENT OF ENVIRONMENTAL PROTECTION STORE, 79 ELM STREET, HARTFORD, CT 06106.
4. THE CONTRACTOR SHALL SCHEDULE ALL OPERATIONS TO LIMIT DISTURBANCE TO THE SMALLEST PRACTICAL AREA FOR THE SHORTEST POSSIBLE TIME. OVERALL SITE DISTURBANCE SHALL BE CONFINED TO THOSE LIMITS DELINEATED ON THE PLANS.
5. THE CONTRACTOR IS RESPONSIBLE FOR THE TIMELY INSTALLATION, INSPECTION, REPAIR OR REPLACEMENT OF EROSION CONTROL DEVICES TO INSURE PROPER OPERATION.
6. THE CONTRACTOR SHALL NOTIFY THE DESIGN ENGINEER OF UNSATISFACTORY EROSION CONDITIONS NOT CONTROLLED BY THE EROSION AND SEDIMENT CONTROL PLAN AND SHALL INSTALL ADDITIONAL MEASURES AS REQUIRED.
7. ALL DISTURBED AREAS NOT COVERED BY BUILDINGS, PAVEMENT, MULCH, PERMANENT RIP RAP EROSION CONTROL, OR GROUND COVER PLANTINGS SHALL BE PLANTED WITH GRASS.
8. ACCUMULATED SEDIMENT REMOVED FROM EROSION CONTROL DEVICES IS TO BE SPREAD AND STABILIZED IN LEVEL, EROSION RESISTANT LOCATIONS AS GENERAL FILL.
9. SPECIAL ATTENTION SHALL BE GIVEN TO THE CONSTRUCTION SEQUENCE AND PHASING OUTLINED ON THESE PLANS.
10. THE CONTRACTOR SHALL BE RESPONSIBLE FOR CLEANING ANY CONSTRUCTION DEBRIS OR SEDIMENT FROM EXISTING ROADS AS ORDERED BY THE TOWN AND/OR STATE. IF ANY DEBRIS OR SEDIMENT FROM CONSTRUCTION ACTIVITIES ENTER ONTO THESE ROADWAYS.
11. ANY ADDITIONAL SEDIMENT/EROSION CONTROL MEASURES DEEMED NECESSARY BY THE TOWN OR STATE STAFF DURING CONSTRUCTION SHALL BE IMPLEMENTED BY THE CONTRACTOR. IN ADDITION, THE CONTRACTOR SHALL BE RESPONSIBLE FOR THE MAINTENANCE, REPAIR AND/OR REPLACEMENT OF ALL REQUIRED CONTROL MEASURES UNTIL ALL DISTURBED AREAS HAVE BEEN STABILIZED TO THE SATISFACTION OF THE TOWN OR STATE.
12. SEE DETAIL SHEETS FOR ADDITIONAL DETAILS AND NOTES AND FOR CONSTRUCTION PHASING PLANS.
13. IN AREAS WHERE LIMITS OF DISTURBANCE AND NOT DELINEATED BY SILT FENCE, INSTALL CONSTRUCTION FENCE FOR TREE PROTECTION AND DELINEATION OF LIMIT OF DISTURBANCE.

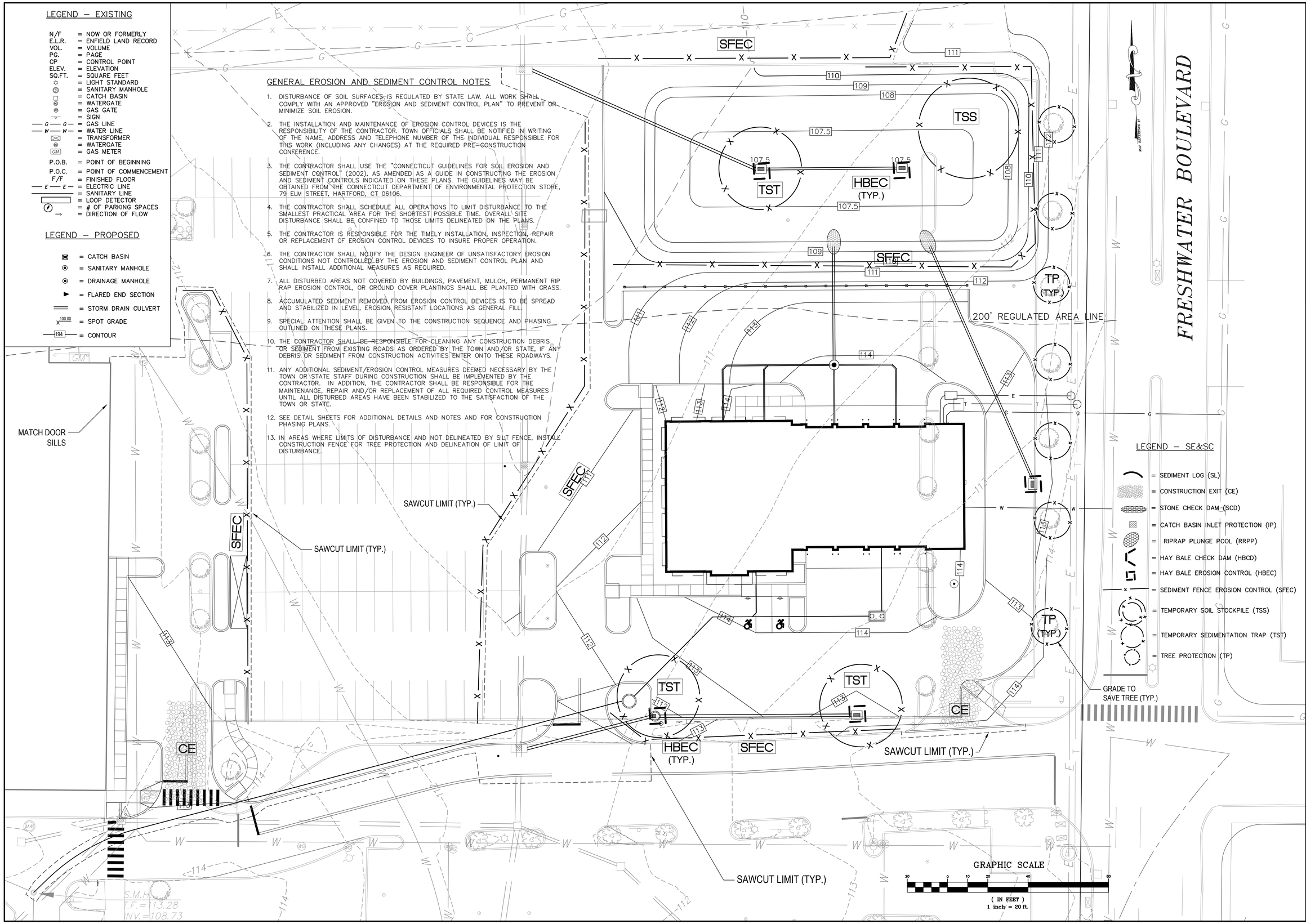

LEGEND – SE&SC

- = SEDIMENT LOG (SL)
- = CONSTRUCTION EXIT (CE)
- = STONE CHECK DAM (SCD)
- = CATCH BASIN INLET PROTECTION (IP)
- = RIPRAP PLUNGE POOL (RRPP)
- = HAY BALE CHECK DAM (HBCD)
- = HAY BALE EROSION CONTROL (HBEC)
- = SEDIMENT FENCE EROSION CONTROL (SFEC)
- = TEMPORARY SOIL STOCKPILE (TSS)
- = TEMPORARY SEDIMENTATION TRAP (TST)
- = TREE PROTECTION (TP)

F. A. Hesketh & Associates, Inc.
3 Creamery Brook, East Granby, CT 06026
Civil & Traffic Engineers · Surveyors · Planners · Landscape Architects
Phone (860) 653-8000
Fax (860) 844-8600
e-mail hesketh@snet.net

Revisions:

No.	Date	Description
1	08-28-2020	Submittal

SOIL EROSION & SEDIMENTATION CONTROL PLAN

PREPARED FOR

AAA CLUB ALLIANCE, INC.

ENFIELD COMMONS
25 HAZARD AVENUE
ENFIELD, CONNECTICUT

date: 07-06-2020	drawn by: RJK	job no: 19001	
Scale: 1" = 20'	checked by: DSZ	sheet no: 1 OF 1	

EC-1

Q:\2019\19001 – Enfield Common\AAA VE Redesign\Submission\AAAgr104.dwg, EC-1, Sep 03, 2020 – 3:12:02 PM

RECONSTRUCT C.B.
NEW 'C-DBL' TOP
F.L.=104.38-12"

124'-12" CPE(S) S=0.0050

66'-12" CPE(S) S=0.0050

C.B. 'C-L'
DOUBLE TYPE II
TF.=108.18
INV.=103.73-30" RCP

C.B. 'C-L'
TF.=108.76
INV.=104.26-30" RCP

200' FROM BROOK

CB TYPE 'C-L'
T.F.=107.50
F.L.=105.00

MOD. RIP RAP
PLUNGE POOL

MOD. RIP RAP
PLUNGE POOL

CB TYPE 'C-L'
T.F.=107.50
F.L.=105.33

R.C.F.E.S.
F.L.=108.00

R.C.F.E.S.
F.L.=108.00

SITE LIGHT TO REMAIN

112.5

STORM MH.
T.F.=114.16
F.L.=108.56-12"
F.L.=108.89-8" W
F.L.=109.06-6" E

200' REGULATED AREA LINE

56'-12" CPE
S=0.010

113.5

111.5

126'-12" CPE(S)
S=0.0050

8" PVC
8" PVC
6" PVC

6" PVC
6" PVC
6" PVC
6" PVC

ALL ROOF DRAINS
MIN. SLOPE = 0.020

ELEC. TRANS. PAD
PER EVERSOURCE

GAS METER

6" PVC
ROOF DRAINS
F.L.=110.64±
(TYP. OF 4)

BLDG. F.F.=115.00

INV=110.00±

INV=109.50±

6" PVC
FLR. DRAINS

6" PVC

C.B. 'C-L'
TF.=109.51
INV.=104.86-30" RCP
INV.=105.43-30" RCP

111.5

112.5

113.5

SEE SHEET NT-1 FOR
DRAINAGE AND UTILITY NOTES

RECONSTRUCT C.B.
NEW TYPE 'C-DBL' TOP
T.F.=111.00
F.L.=107.00-15"

C.B. 'C-L'
DOUBLE TYPE II
T.F.=110.73
F.L.=105.28-30"

SANITARY PUMP STATION
(WATER TIGHT COVER)
T.F.=113.30
INV.=108.17-6" PVC
INV.=108.00-2" F.M.

113'-6" PVC
S=.020

113.5

1000 GAL. OIL
SEPARATOR
T.F.=114.23
INV.=109.50

SITE LIGHT TO REMAIN

RECONSTRUCT C.B.
NEW TYPE 'C' TOP
T.F.=112.50

C.B. 'C-L'
T.F.=112.83
F.L.=108.58-18" RCP NW
F.L.=109.65-4" PVC NW
F.L.=FULL-30" RCP SW
F.L.=FULL 30"± RCP E

66'-15" CPE(S)
S=0.0050

96'-12" CPE
S=0.0050

C.B. STC 450i
T.F.=111.80
F.L.=107.33-OUT
F.L.=107.58-IN

CB TYPE 'C'
W/TRAP HOOD
T.F.=112.60
F.L.=108.06

310'-2" PVC FORCE MAIN (SCH. 80)- MAINTAIN 48" COVER MIN.

FORCE MAIN UNDER WATER

FORCE MAIN UNDER WATER

C.B. 'C-L'
T.F.=110.87 15" RCP
INV.=106.26 24" RCP
INV.=106.47 30" RCP
INV.=105.27 30" RCP
INV.=105.42

HAZARDVILLE WATER COMPANY EASEMENT
E.L.R. VOL.859 PG.56

CORE DRILL SAN. M.H.
T.F.=113.28
INV.=108.73-8"
INV.=109.00-2"
RECONSTRUCT BENCH & INVERT

C.B. 'C-L'
T.F.=113.28
INV.=108.73

ALL CPE STORM PIPES TO BE
N-12 WATER TIGHT (WTIB)

GRAPHIC SCALE
20 0 10 20 40 80
(IN FEET)
1 inch = 20 ft.

ELEC. CONDUIT
PER EVERSOURCE

ELEC. M.H. PER
EVERSOURCE

JACK GAS LINE
UNDER ROADWAY

TELE. M.H. PER
FRONTIER

TELE. CONDUIT
PER FRONTIER

TAP AND CURB BOX PER
C.W.C.,
TRENCH REPAIR PER
TOWN STANDARD

1 ¼" WATER

CB TYPE 'C'
W/ TRAP HOOD
T.F.=112.20
F.L.=108.63

FRESHWATER BOULEVARD

PROPOSED
EASEMENT TO THE TOWN
OF ENFIELD FOR
ROADWAY PURPOSES
(NO RECORDED
EASEMENT FOUND)
(ROAD WIDENING REQUIRED TO MEET
CONDITIONS OF APPROVAL COMPLETED)
(SEE NOTE 12)

TRAFFIC CONTROL EASEMENT
IN FAVOR OF THE TOWN OF
ENFIELD E.L.R. VOL.632 PG.78

F. A. Hesketh & Associates, Inc.
3 Creamery Brook, East Granby, CT 06026
Civil & Traffic Engineers · Surveyors · Planners · Landscape Architects
Phone (860) 653-8000
Fax (860) 844-8600
e-mail hesketh@snet.net

Revisions:

No.	Date	Description
1	08-28-2020	Submittal
2	10-06-2020	STAFF COMMENTS

UTILITY AND DRAINAGE PLAN
PREPARED FOR
AAA CLUB ALLIANCE, INC.
ENFIELD COMMONS
25 HAZARD AVENUE
ENFIELD, CONNECTICUT

date: 07-06-2020 | drawn by: RJK | checked by: DSZ | job no: 19001 | sheet no: 1 OF 1

scale: 1" = 20'

UT-1

Q:\2019\19001 - Enfield Common\AAA VE Redesign\Submission\AAAgr105.dwg, UT-1, Oct. 08, 2020 - 12:00:49 PM

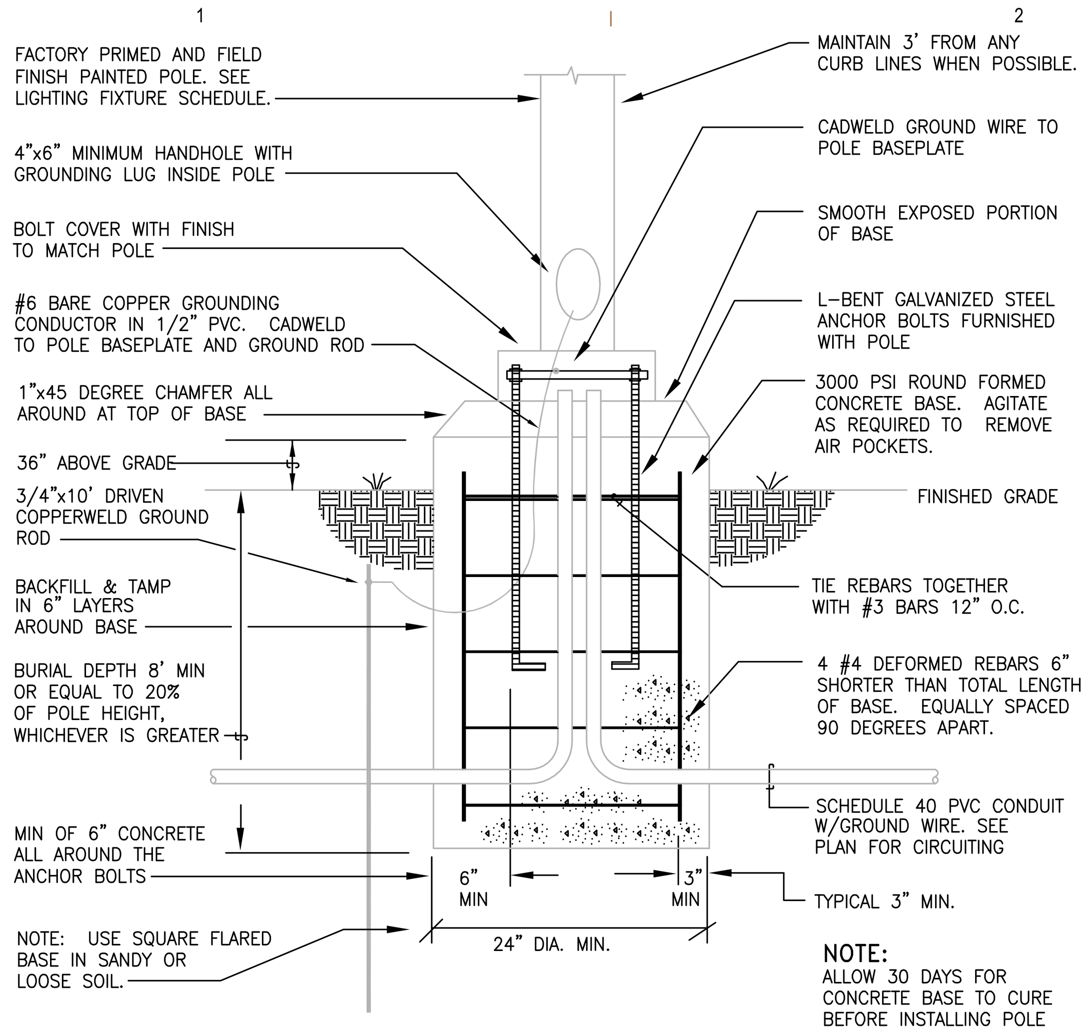

NOTE:
ALLOW 30 DAYS FOR CONCRETE BASE TO CURE BEFORE INSTALLING POLE

2 POLE BASE DETAIL
DIAGRAMMATIC

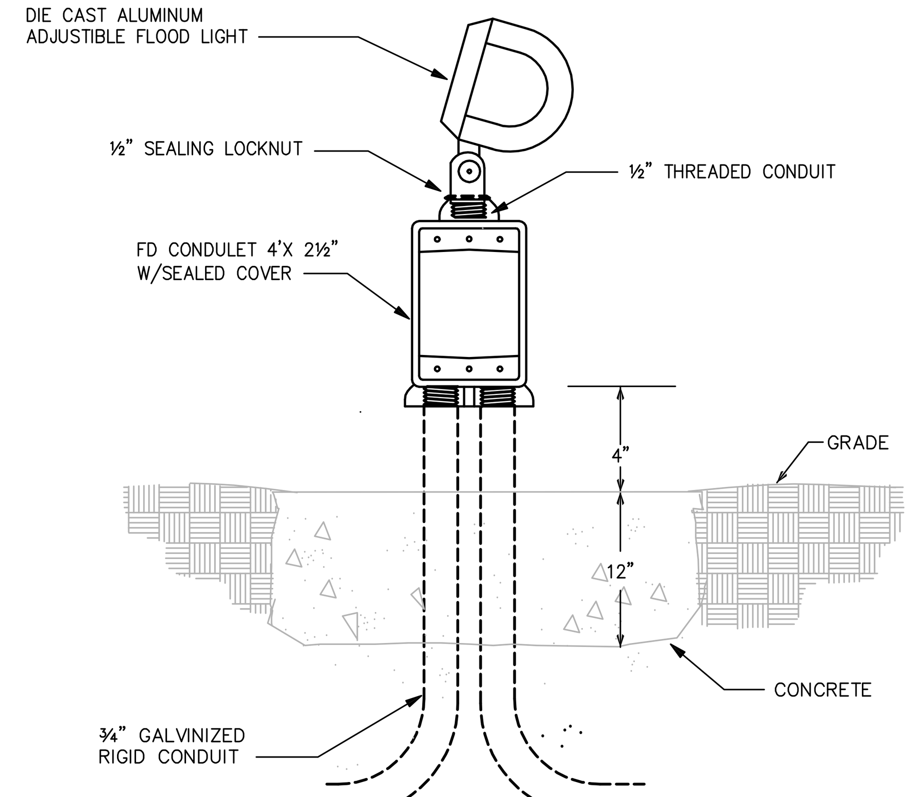

3 TYPE "OF" FLAG POLE LIGHT FOOTING DETAIL
NOT TO SCALE

SITE LIGHTING FIXTURE SCHEDULE

SYMBOL & TYPE	MANUFACTURER & CATALOG NUMBER	DESCRIPTION	LAMP TYPE & QUANTITY	VOLTS/ BALLAST	MOUNTING	INPUT WATTS
S1	LITHONIA LIGHTING #DSX1-LED-P1-40K-T1S-MVOLT-RPA-PIRH	FULL CUTOFF POLE MOUNTED LED FIXTURE. TYPE I SHORT DISTRIBUTION. ROUND STRAIGHT STEEL POLE WITH HANDHOLE, CLOSED TOP, BOLT COVER, L-BENT GALVANIZED ANCHOR BOLTS, PAINT FINISH TO MATCH LUMINAIRE,	30 LED'S 6,956 LUMENS BUG: B2-U0-G2 4000K	UNIVERSAL	POLE 25'-0" A.F.G.	54W 129 LUMENS/W
S2	LITHONIA LIGHTING #DSX1-LED-P1-40K-TFTM-MVOLT-RPA-PIRH	FULL CUTOFF POLE MOUNTED LED FIXTURE. FORWARD THROW MEDIUM DISTRIBUTION. FIXTURES CALCULATED WITH HOUSE SHIELD ACCESSORY. ROUND STRAIGHT STEEL POLE WITH HANDHOLE, CLOSED TOP, BOLT COVER, L-BENT GALVANIZED ANCHOR BOLTS, PAINT FINISH TO MATCH LUMINAIRE,	30 LED'S 6,963 LUMENS BUG: B1-U0-G2 4000K	UNIVERSAL	POLE 25'-0" A.F.G.	54W 129 LUMENS/W
OA	LITHONIA LIGHTING #DSXW2-LED-30C-700-40K-T2M-MVOLT	EXTERIOR LED WALL FIXTURE. TYPE II MEDIUM DISTRIBUTION. CONFIRM FINAL MOUNTING HEIGHT WITH ARCHITECT.	30 LED'S 7,949 LUMENS BUG: B2-U0-G2 4000K	UNIVERSAL	SURFACE WALL 16'-0" A.F.G.	71W 112 LUMENS/W

WILLIAM L. TEETER, PE
5500 77 CENTER DRIVE • SUITE 140
CHARLOTTE, NC 28217
P: 704.376.2999 • F: 704.376.2999

WILLIAM L. TEETER HEREBY RESERVES ITS COMMON LAW COPYRIGHT AND ALL OTHER PROPERTY RIGHTS TO THESE DOCUMENTS, ANY ASSOCIATED SPECIFICATIONS, DESIGN CONCEPTS, DETAILS AND IDEAS. THESE DOCUMENTS, SPECS, DESIGN CONCEPTS, DETAILS AND IDEAS SHALL NOT BE REPRODUCED, REVISED OR COPIED IN WHOLE OR IN PART, NOR SHALL THEY BE DISTRIBUTED TO ANY OTHER PARTIES WITHOUT WRITTEN PERMISSION FROM WILLIAM L. TEETER ANY ELECTRONIC AND COMPUTER FILES OF THESE DOCUMENTS ARE THE SOLE PROPERTY OF WILLIAM L. TEETER AND ARE INTENDED FOR ARCHIVE AND RECORD PURPOSES ONLY, COMPUTER FILES SHALL NOT BE COPIED IN WHOLE OR IN PART WITHOUT WRITTEN PERMISSION FROM WILLIAM L. TEETER

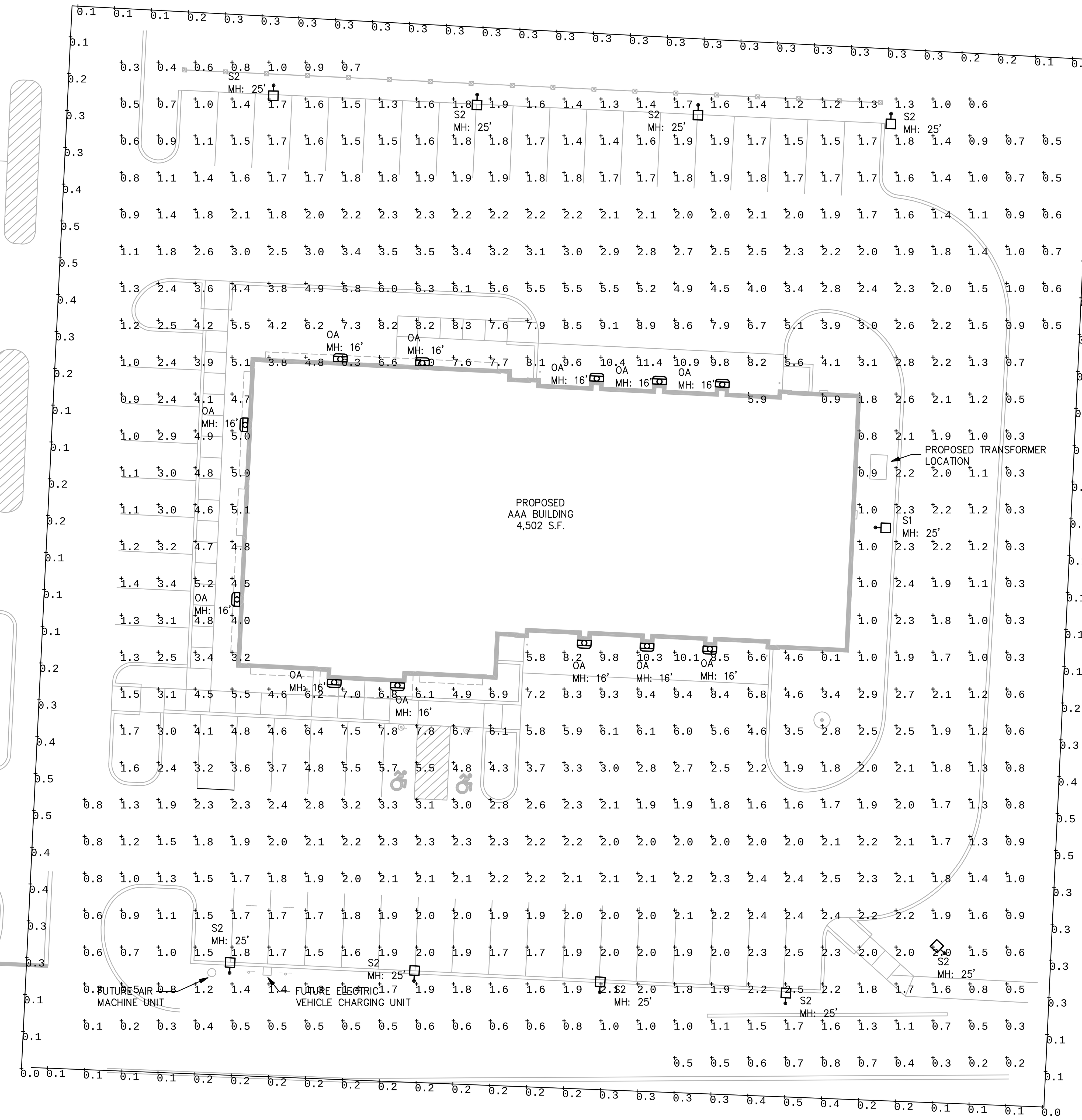

1 SITE PLAN – ELECTRICAL
SCALE: 1" = 20'-0"

SITE PLAN ABBREVIATION NOTES:
MH = POLE MOUNTING HEIGHT.

BUG = BACKLIGHT, UPLIGHT, & GLARE RATING AS PER THE LIGHTING INDUSTRIES CLASSIFICATION SYSTEM.

Calculation Summary							
Label	CalcType	Units	Avg	Max	Min	Avg/Min	Max/Min
Property Line	Illuminance	Fc	0.24	0.5	0.0	N.A.	N.A.
Site	Illuminance	Fc	2.63	11.4	0.1	26.30	114.00

D-Series Size 1
LED Area Luminaire

Catalog Number:
Notes:
Type: S1 & S2

Hit the Tab key or mouse over the page to see all interactive elements.

Specifications
EPA: 1.01 ft² (0.09 m²)
Length: 33" (83.8 cm)
Width: 13" (33.0 cm)
Height: 7-1/2" (19.0 cm)
Weight (max): 27 lbs (12.2 kg)

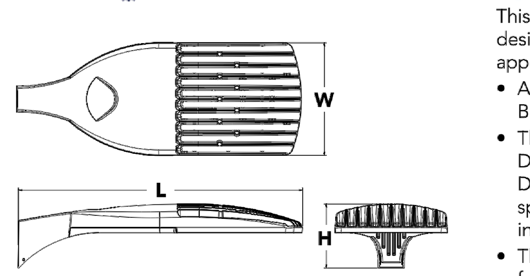

A+ Capable Luminaire
This item is an A+ capable luminaire, which has been designed and tested to provide consistent color appearance and system-level interoperability.

- All configurations of this luminaire meet the Acuity Brands' specification for chromatic consistency
- This luminaire is A+ Certified when ordered with DTL® controls marked by a shaded background. DTL DLL equipped luminaires meet the A+ specification for luminaire to photocontrol interoperability1
- This luminaire is part of an A+ Certified solution for ROAM® or XPoint™ Wireless control networks, providing out-of-the-box control compatibility with simple commissioning, when ordered with drivers and control options marked by a shaded background¹

To learn more about A+, visit www.acuitybrands.com/aplus.

1. See ordering tree for details.
2. A+ Certified Solutions for ROAM require the order of one ROAM node per luminaire. Sold Separately: Link to Roam; Link to DTL DLL

A+ Capable options indicated by this color background.

Ordering Information
EXAMPLE: DSX1 LED P7 40K T3M MVOLT SPA DDBXD

DSX1LED

Series	LEDs	Color temperature	Distribution	Voltage	Mounting
DSX1 LED	Forward optics: P1, P2, P3, P4, P5, P6, P7, P8, P9; Rotated optics: P10[1], P11[1], P12[1], P13[1]	30K 3000 K; 40K 4000 K; 50K 5000 K; AMBPC Amber phosphor converted[2]	T1S Type I short; T2S Type II short; T2M Type II medium; T3S Type III short; T3M Type III medium; T4M Type IV medium; TFTM Forward throw medium; T5VS Type V very short; T5S Type V short; T5M Type V medium; T5W Type V wide; BLC Backlight control[2,3]; LCCO Left corner cutoff[2,3]; RCCO Right corner cutoff[2,3]	MVOLT[4,5]; 120[6]; 208[5,6]; 240[5,6]; 277[6]; 347[5,6,7]; 480[5,6,7]	Shipped included: SPA Square pole mounting; RPA Round pole mounting; WBA Wall bracket; SPUMBA Square pole universal mounting adaptor[8]; RPUMBA Round pole universal mounting adaptor[8]; Shipped separately: KMA8 DDBXD U Mast arm mounting bracket adaptor (specify finish)[9]

Control options		Other options	Finish (required)
Shipped installed: NLTAIR2 nLight AIR generation 2 enabled[10]; PER NEMA twist-lock receptacle only (controls ordered separate)[11]; PER5 Five-wire receptacle only (controls ordered separate)[11,12]; PER7 Seven-wire receptacle only (controls ordered separate)[11,12]; DMG 0-10V dimming extend out back of housing for external control (leads exit fixture); DS Dual switching[13,14]; PIR Bi-level, motion/ambient sensor, 8-15' mounting height, ambient sensor enabled at 5fc[5,15,16]; PIRH Bi-level, motion/ambient sensor, 15-30' mounting height, ambient sensor enabled at 5fc[5,15,16]; PIRHN Network, Bi-Level motion/ambient sensor[17]; PIR1FC3V Bi-level, motion/ambient sensor, 8-15' mounting height, ambient sensor enabled at 1fc[5,15,16]	PIRH1FC3V Bi-level, motion/ambient sensor, 15-30' mounting height, ambient sensor enabled at 1fc[5,15,16]; BL30 Bi-level switched dimming, 30%[5,14,18]; BL50 Bi-level switched dimming, 50%[5,14,18]; PNMTDD3 Part night, dim till dawn[5,19]; PNMT5D3 Part night, dim 5 hrs[5,19]; PNMT6D3 Part night, dim 6 hrs[5,19]; PNMT7D3 Part night, dim 7 hrs[5,19]; FAO Field adjustable output[20]	Shipped installed: HS House-side shield[21]; SF Single fuse (120, 277, 347V)[6]; DF Double fuse (208, 240, 480V)[6]; L90 Left rotated optics[1]; R90 Right rotated optics[1]; Shipped separately: BS Bird spikes[22]; EGS External glare shield[22]	DDBXD Dark bronze; DBLXD Black; DNAXD Natural aluminum; DWHXD White; DDBTXD Textured dark bronze; DBLBXD Textured black; DNATXD Textured natural aluminum; DWHGXD Textured white

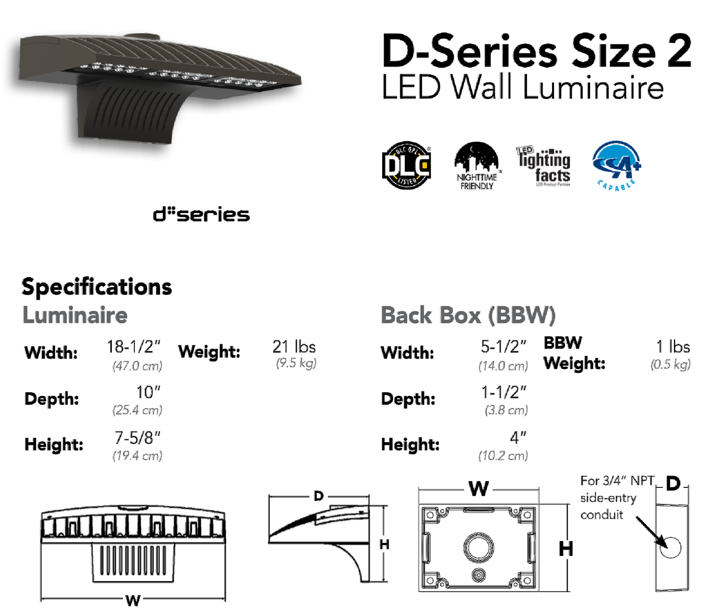

D-Series Size 2
LED Wall Luminaire

Catalog Number: DSXW2-LED-30C-700-40K-T2M-MVOLT
Notes:
Type: OA

Hit the Tab key or mouse over the page to see all interactive elements.

Specifications
Luminaire
Width: 18-1/2" (47.0 cm) Weight: 21 lbs (9.5 kg)
Depth: 10" (25.4 cm)
Height: 7-5/8" (19.4 cm)

Back Box (BBW)
Width: 5-1/2" (14.0 cm) BBW Weight: 1 lbs (0.5 kg)
Depth: 1-1/2" (3.8 cm)
Height: 4" (10.2 cm)

For 3/4" NPT side-entry conduit

A+ Capable Luminaire
This item is an A+ capable luminaire, which has been designed and tested to provide consistent color appearance and system-level interoperability.

- All configurations of this luminaire meet the Acuity Brands' specification for chromatic consistency
- This luminaire is A+ Certified when ordered with DTL® controls marked by a shaded background. DTL DLL equipped luminaires meet the A+ specification for luminaire to photocontrol interoperability1
- This luminaire is part of an A+ Certified solution for ROAM® or XPoint™ Wireless control networks, providing out-of-the-box control compatibility with simple commissioning, when ordered with drivers and control options marked by a shaded background¹

To learn more about A+, visit www.acuitybrands.com/aplus.

1. See ordering tree for details.
2. A+ Certified Solutions for ROAM require the order of one ROAM node per luminaire. Sold Separately: Link to Roam; Link to DTL DLL

A+ Capable options indicated by this color background.

Ordering Information
EXAMPLE: DSXW2 LED 30C 700 40K T3M MVOLT DDBTXD

DSXW2 LED

Series	LEDs	Drive Current	Color temperature	Distribution	Voltage	Mounting	Control Options
DSXW2 LED	20C 20 LEDs (two engines); 30C 30 LEDs (three engines)	350 350 mA; 530 530 mA; 700 700 mA; 1000 1000 mA[1] (1 A)	30K 3000 K; 40K 4000 K; 50K 5000 K; AMBPC Amber phosphor converted[2]	T2S Type II Short; T2M Type II Medium; T3S Type III Short; T3M Type III Medium; T4M Type IV Medium; TFTM Forward Throw Medium	MVOLT[3]; 120[4]; 208[4]; 240[4]; 277[4]; 347[4,5]; 480[4,5]	Shipped included: (blank) Surface mounting bracket; Shipped separately[6]: BBW Surface-mounted back box (for conduit entry)	Shipped installed: PE Photoelectric cell, button type[7]; PER NEMA twist-lock receptacle only (control ordered separate)[8]; PER5 Five-wire receptacle only (control ordered separate)[8,9]; PER7 Seven-wire receptacle only (control ordered separate)[8,9]; DMG 0-10v dimming wires pulled outside fixture (for use with an external control, ordered separately); PIR 180° motion/ambient light sensor, <15' mtg ht[10,11]; PIRH 180° motion/ambient light sensor, 15-30' mtg ht[10,11]; PIR1FC3V Motion/ambient sensor, 8-15' mounting height, ambient sensor enabled at 1fc[11,12]; PIRH1FC3V Motion/ambient sensor, 15-30' mounting height, ambient sensor enabled at 1fc[11,12]

Other Options		Finish (required)
Shipped installed: SF Single fuse (120, 277, 347V)[3]; DF Double fuse (208, 240, 480V)[3]; HS House-side shield[4]; SPD Separate surge protection[13]	Shipped separately[13]: BSW Bird-deterrent spikes; VG Vandal guard	DDBXD Dark bronze; DBLXD Black; DNAXD Natural aluminum; DWHXD White; DSSXD Sandstone; DDBTXD Textured dark bronze; DBLBXD Textured black; DNATXD Textured natural aluminum; DWHGXD Textured white; DSSTXD Textured sandstone

THIS DOCUMENT HAS BEEN PREPARED BY PROGRESSIVE AE AS AN INSTRUMENT OF SERVICE, AND PROGRESSIVE AE SHALL RETAIN ALL COMMON LAW, STATUTORY AND OTHER RESERVED RIGHTS, INCLUDING THE COPYRIGHT THERETO.

progressive | ae
330 South Tryon St. Suite 500 | Charlotte, NC 28202 | 704.731.8080 | www.progressiveae.com

AAA CLUB ALLIANCE
CAR CARE CENTER
25 HAZARD AVE.
ENFIELD, CT 06082

If this document is sealed and signed in a digital or electronic format and is received from someone other than the sealing professional identified in the document, you must contact the sealing professional in writing to validate authenticity of the document. The sealing professional disclaims the seal and signature and shall not be liable for any liability associated with it where the authenticity of any digital or electronic seal or signature has not been validated in this manner.

ISSUANCE
ISSUED FOR CONSTRUCTION
2018/12/07

REVISIONS
NO. DATE DESCRIPTION

FILE NUMBER	18191
PROJECT MANAGER	CAD
PROFESSIONAL	CAD
DRAWN BY	CLE
CHECKED BY	WLT

SITE PLAN - ELECTRICAL
E100

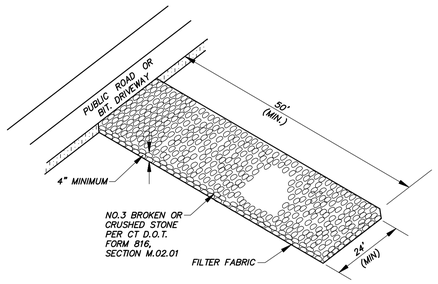

CONSTRUCTION EXIT (CE)

N.T.S.

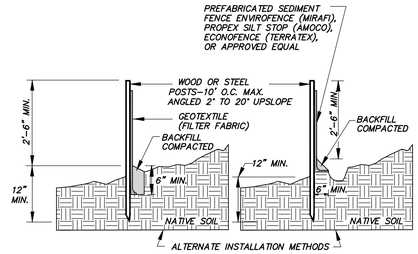

NOTE:
1. WOOD POSTS SHALL BE HARDWOOD 1 1/2" x 1 1/2" x 48" MIN. STEEL POST SHALL BE A MINIMUM OF 0.5 POUNDS PER LINEAR FOOT X 48".
2. JOINTS, WHEN REQUIRED, SHALL BE SPLICED & SECURELY SEALED TOGETHER, AT POST LOCATIONS ONLY, WITH A MINIMUM 6" OVERLAP.

SEDIMENT FENCE EROSION CONTROL (SFEC)

N.T.S.

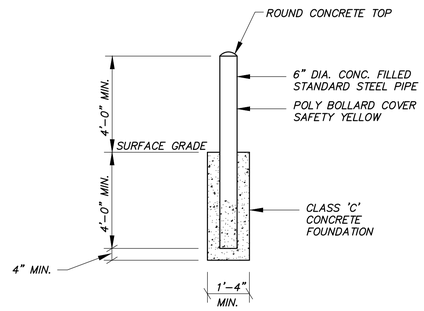

BOLLARD DETAIL

N.T.S.

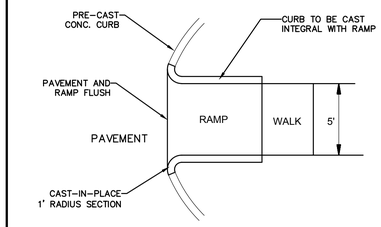

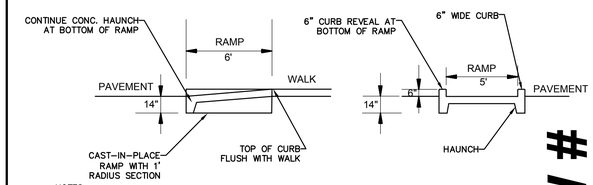

NOTES:
1. CT DOT FORM 818, CLASS 'C' CONCRETE.
2. RAMP CONSTRUCTION TO MATCH SIDEWALK CONSTRUCTION DETAIL.
3. ALL ACCESSIBLE RAMPS TO RECEIVE BROOM FINISH 90° TO THE SLOPE OF THE RAMP.
4. IF CURRENT BUILDING CODE REQUIRES ALTERNATE DESIGN, CONSTRUCT RAMP TO MEET CURRENT CODE REQUIREMENTS.
5. MAXIMUM CROSS SLOPE = 2% MAX..

ACCESSIBLE RAMP

N.T.S.

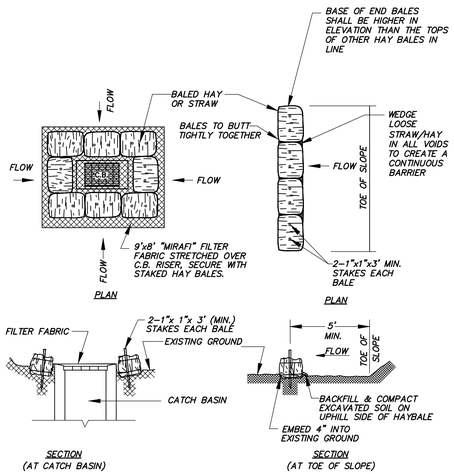

HAYBALE EROSION CONTROL (HBEC)

N.T.S.

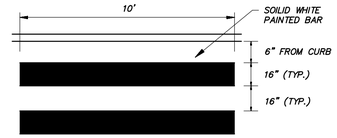

PAINTED PEDESTRIAN CROSSWALK

N.T.S.

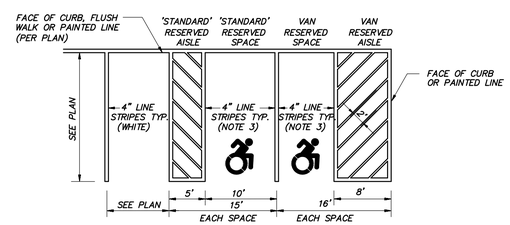

NOTES:
1. AISLE CONFIGURATION PER PLAN.
2. SIGN/BOLLARD LOCATION PER PLAN.
3. LINE STRIPING COLOR AND ADA SYMBOL SPECIFICS NEED TO COORDINATED WITH ENFIELD BUILDING INSPECTOR BEFORE INSTALLATION
4. ADJACENT 'STANDARD' RESERVED PARKING SPACES MAY SHARE COMMON AISLE. ADJACENT 'VAN' RESERVED PARKING SPACES MAY SHARE A COMMON AISLE.

RESERVED PARKING SPACE LAYOUT

N.T.S.

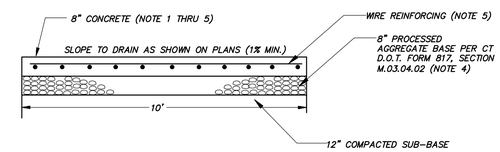

NOTES:
1. CONCRETE SHALL BE 4000 PSI, MAX. WATER/CEMENT RATIO .45, AIR ENTRAINED 4½% – 7½% DESIGN MIX TO BE SUBMITTED
2. BROOM FINISH.
3. CONTRACTION (CONTROL) JOINTS: EARLY ENTRY SAW CUT, ⅛" WIDE, MIN 1" DEEP, MAX. 15' APART, ELASTOMERIC SEALANT.
4. COARSE AGGREGATE FOR AGGREGATE BASE MATERIAL MAY INCLUDE RECLAIMED MISC. AGGREGATE PER CTDOT FORM 817, SECTION M.05.01.02.
5. 6"X6", 10/10 WELDED WIRE FABRIC

CONC. APRON

N.T.S.

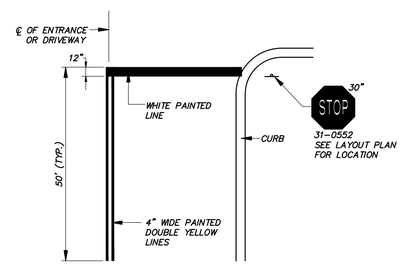

TYPICAL PAVEMENT MARKINGS AT STOP BAR

N.T.S.

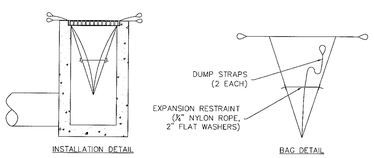

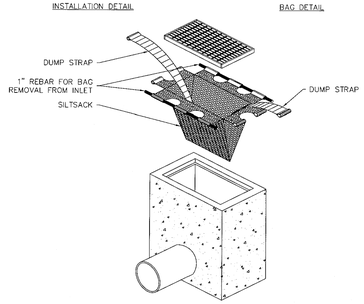

1. INSTALL AND MAINTAIN IN ACCORDANCE WITH MANUFACTURER'S RECOMMENDATIONS

INLET PROTECTION (IP) [SILT SACK INSERT]

N.T.S.

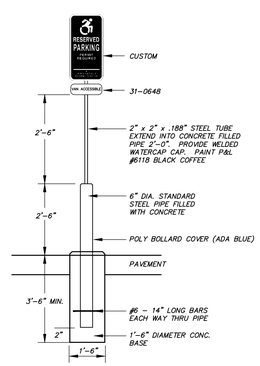

ACCESSIBLE SPACE SIGN POST/BASE

N.T.S.

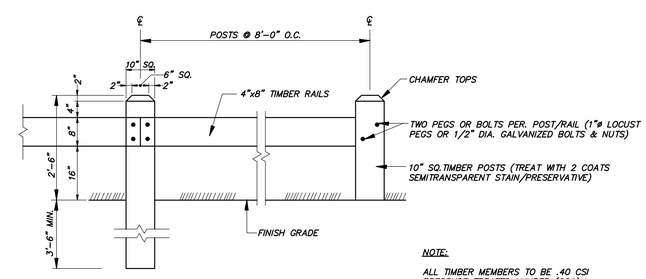

NOTE:
ALL TIMBER MEMBERS TO BE .40 CSI PRESSURE TREATED LUMBER (CCA)

WOOD BEAM GUIDE RAIL

N.T.S.

PH#

File IW #

F. A. Hesketh & Associates, Inc.
3 Creamery Brook, East Granby, CT 06026
Phone (860) 653-8000 Fax (860) 844-8600 · www.fahesketh.com · mail@fahesketh.com
Civil & Traffic Engineers · Surveyors · Planners · Landscape Architects

Revisions:

No.	Date	Description
1	08-28-2020	Town comments

DETAILS
PREPARED FOR
AAA CLUB ALLIANCE, INC.
ENFIELD COMMONS
25 & 39 HAZARD AVENUE
ENFIELD, CONNECTICUT

Date: 07-06-2020	Drawn by: RJK	Job no: 19001
Scale: NTS	Checked by: DSZ	Sheet no: 1 OF 3

SD-1

Q:\2019\19001 – Enfield Common\AAA VE Redesign\Submission\AAAsd102.dwg, SD-1, Sep. 03, 2020 – 2:15:23 PM

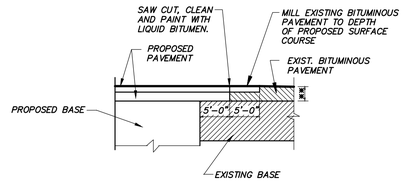

NOTES:
1. OVERLAP BOTH PROPOSED BITUMINOUS CONCRETE COURSES (CLASS I AND CLASS 2) OVER EXISTING SUBBASE.
2. ** MINIMUM THICKNESS TO BE SAME AS PROPOSED BITUMINOUS CONCRETE OR MATCH THICKNESS OF EXISTING PAVEMENT, WHICH EVER IS GREATER.

PAVEMENT MATCH TREATMENT

N.T.S.

CONCRETE MATERIAL:
1. 3,500 PSI @28 DAYS
2. FIBER REINFORCED – 1.5 LBS/CU. YD.
3. TYPE I/II CEMENT – 564 POUNDS/CU. YD.
4. AGGREGATE: 75% WASHED SAND, 25% 3/8" AGGREGATE
5. 1-INCH MAX SLUMP.
6. OR ALTERNATE MIX APPROVED BY ENGINEER.

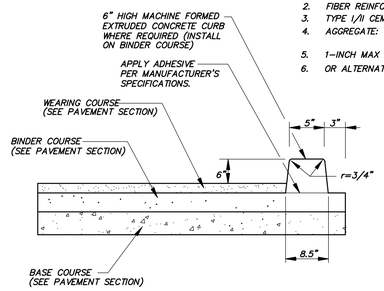

EXTRUDED CONCRETE CURBING

N.T.S.

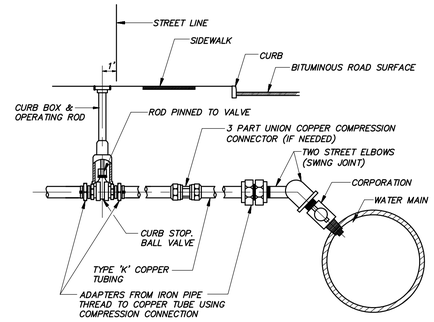

1" SERVICE TAP OFF HORIZ. CENTER LINE & ALL 1 1/2" AND 2" TAPS

N.T.S.

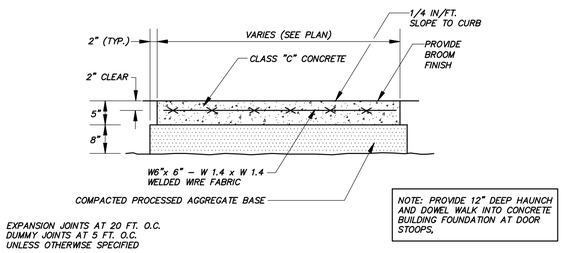

NOTE: PROVIDE 12" DEEP HAUNCH AND DOWEL WALK INTO CONCRETE BUILDING FOUNDATION AT DOOR STOOPS.

CONCRETE SIDEWALK

N.T.S.

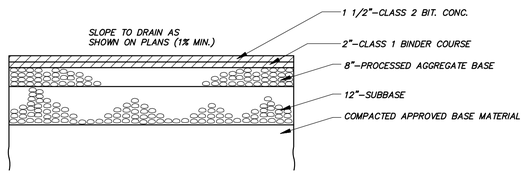

PAVEMENT SECTION

N.T.S.

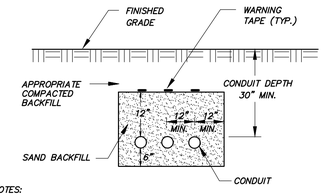

NOTES:
1. CONDUIT – TYPE DB PVC SCH. 40
2. SAND FILL PER DOT OR UTILITY CO. SPECIFICATIONS
3. SHOWN FOR ILLUSTRATIVE PURPOSED ONLY, FOLLOW CUSTODIAL UTILITY COMPANY SPECIFICATIONS.

ELECTRIC/TELEPHONE/CATV TRENCH

N.T.S.

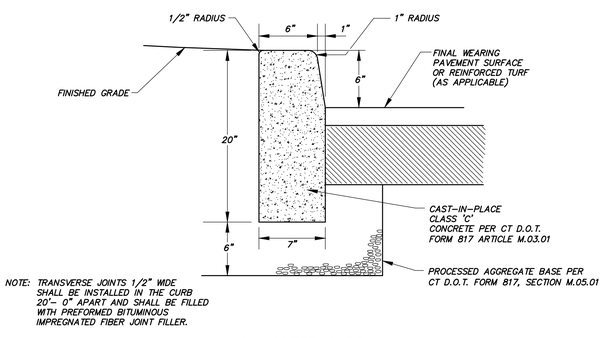

NOTE: TRANSVERSE JOINTS 1/2" WIDE SHALL BE INSTALLED IN THE CURB 20'- 0" APART AND SHALL BE FILLED WITH PREFORMED BITUMINOUS IMPREGNATED FIBER JOINT FILLER.

CONCRETE CURBING

N.T.S.

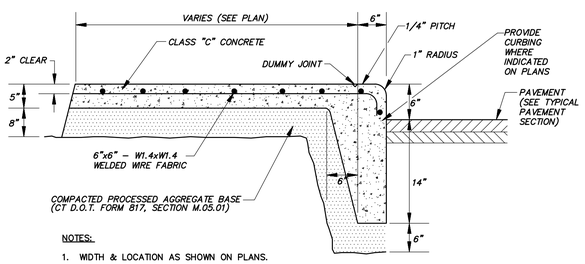

NOTES:
1. WIDTH & LOCATION AS SHOWN ON PLANS.
2. PREMOLDED EXPANSION JOINTS AT 20 FT. O.C.
3. DUMMY JOINTS AT 5 FT. O.C.

CONCRETE CURB AND WALK

N.T.S.

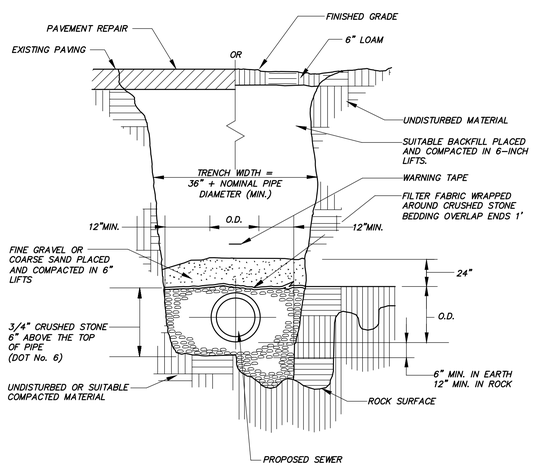

GRAVITY SEWER TRENCH

N.T.S.

New Construction Requirement

EXTERNAL FOG TREATMENT UNIT

Town of Enfield
Department of Public Works, Water Pollution Control Divisiion
820 Enfield Street, Enfield, Ct. 06082
Telephone # (860) 253-6450

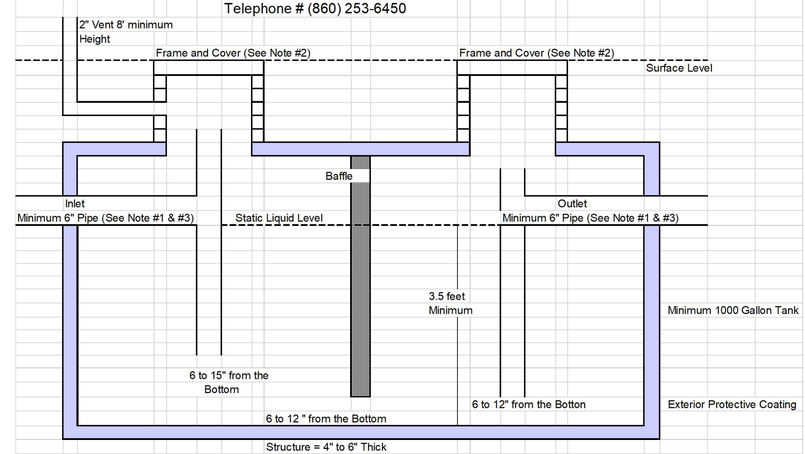

NOTE:
1) All pipe joints water tight.
2) Frame and Cover shall be installed according to Town of Enfield Subdivision Regulations.revised to 02-12-02.
3) All internal pipe shall be schedule 80 and be glued.

(IV)

File IW # PH#

F. A. Hesketh & Associates, Inc.
3 Creamery Brook, East Granby, CT 06026
Phone (860) 653-8000 Fax (860) 844-8600
Civil & Traffic Engineers - Surveyors - Planners - Landscape Architects www.fahesketh.com - mail@fahesketh.com

Revisions:

No.	Date	Description
1	10-06-2020	STAFF COMMENTS

DETAILS
PREPARED FOR
AAA CLUB ALLIANCE, INC.
ENFIELD COMMONS
25 & 39 HAZARD AVENUE
ENFIELD, CONNECTICUT

Date: 07-06-2020 | Drawn by: RJK | Job no: 19001
Scale: NTS | Checked by: DSZ | Sheet no: 2 OF 3

SD-2

Q:\2019\19001 - Enfield Commons\AAA - VE Redesign\Submission\AAAsd103.dwg, SD-2, Oct 08, 2020 - 12:09:18 PM

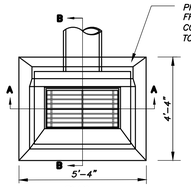

NOTES:

1. ALL MATERIALS SHALL CONFORM TO CT D.O.T. FORM 817, SECTION M.08.02
2. PRECAST CONCRETE TOP TO MATCH PROPOSED BITUMINOUS CONCRETE MOUNTABLE CURB.

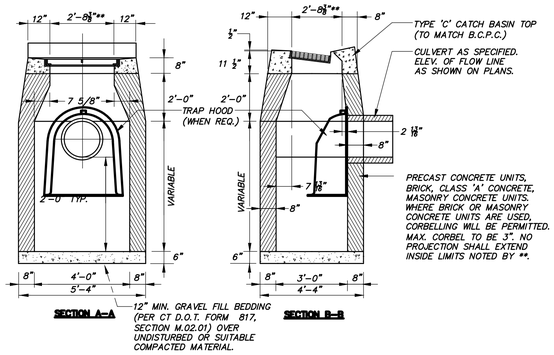

TYPE 'C' CATCH BASIN

N.T.S.

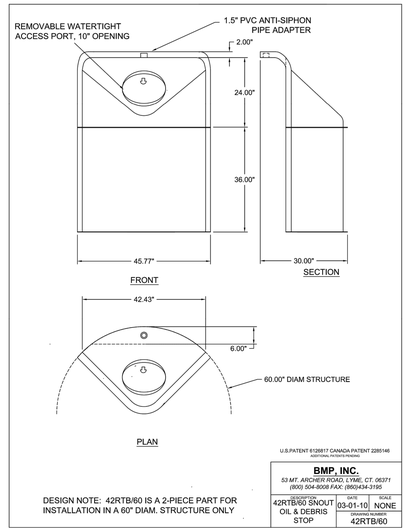

DESIGN NOTE: 42RTB/60 IS A 2-PIECE PART FOR INSTALLATION IN A 60" DIAM. STRUCTURE ONLY

ALL NEW C.B'S TO HAVE TRAP HOODS

TRAP HOOD DETAIL

N.T.S.

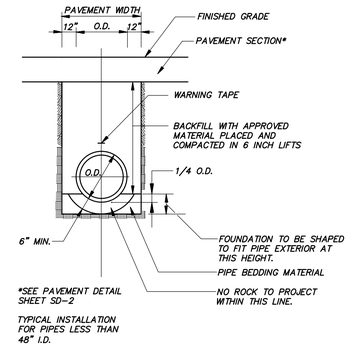

STORM SEWER TRENCH

N.T.S.

Rinker MATERIALS™

Concrete Pipe Division

STC 450i Precast Concrete Stormceptor®
(450 U.S. Gallon Capacity)

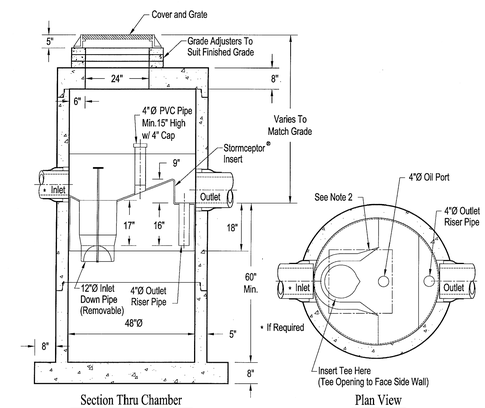

Notes:

1. The Use Of Flexible Connection is Recommended at The Inlet and Outlet Where Applicable.
2. The Cover Should be Positioned Over The Inlet Drop Pipe and The Oil Port.
3. The Stormceptor System is protected by one or more of the following U.S. Patents: #4985148, #5498331, #5725760, #5753115, #5849181, #6068765, #6371690.
4. Contact a Concrete Pipe Division representative for further details not listed on this drawing.

Rinker 027

STC 45i

N.T.S.

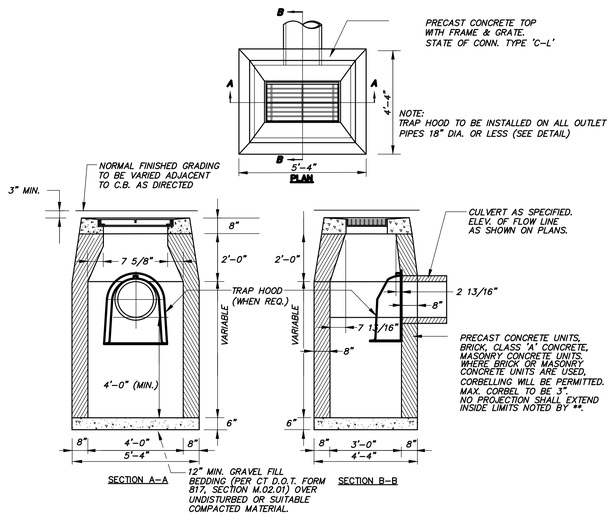

TYPE 'C-L' CATCH BASIN

N.T.S.

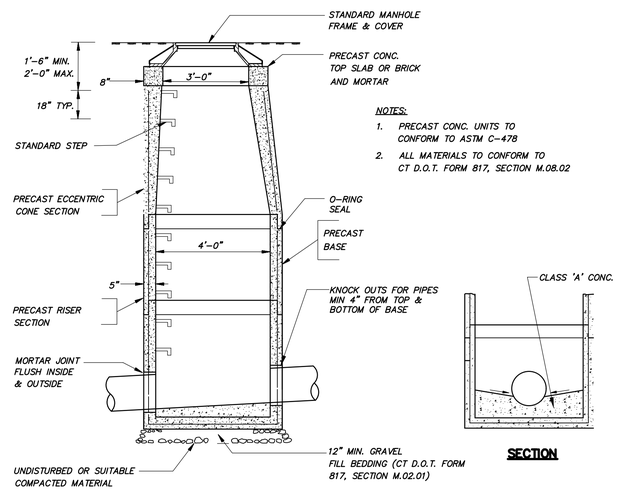

NOTES:

1. PRECAST CONC. UNITS TO CONFORM TO ASTM C-478
2. ALL MATERIALS TO CONFORM TO CT D.O.T. FORM 817, SECTION M.08.02

STORM SEWER MANHOLE

N.T.S.

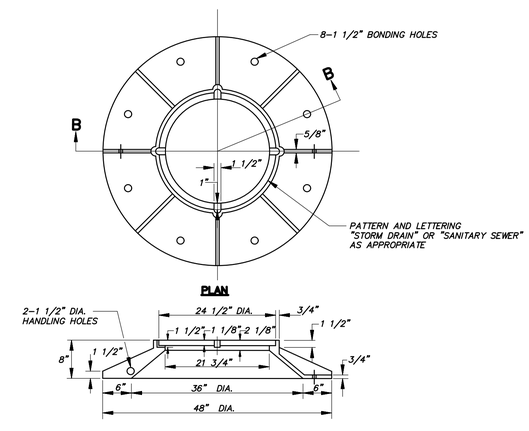

STANDARD FRAME & COVER

N.T.S.

File IW # PH#

F. A. Hesketh & Associates, Inc.
3 Creamery Brook, East Granby, CT 06026
Phone (860) 653-8000 Fax (860) 844-8600
www.fahesketh.com - mail@fahesketh.com
Civil & Traffic Engineers - Surveyors - Planners - Landscape Architects

No.	Date	Description

Revisions:

DETAILS
PREPARED FOR
AAA CLUB ALLIANCE, INC.
ENFIELD COMMONS
25 & 39 HAZARD AVENUE
ENFIELD, CONNECTICUT

Date: 07-06-2020 | Drawn by: RJK | Job no: 19001
Scale: NTS | Checked by: DSZ | Sheet no: 3 OF 3

SD-3

Q:\2019\19001 - Enfield Commons\AAA VE Redesign\Submission\AAAsd102.dwg, SD-3, Jul 06, 2020 - 9:05:51 PM

PROJECT DESCRIPTION

THE PROJECT CONSISTS OF THE CONSTRUCTION OF A NEW 10,197 S.F. BUILDING FOR AAA CLUB ALLIANCE, INC. INCLUDING EIGHT SERVICE BAYS. IT WOULD BE CONSTRUCTED WITHIN AN EXISTING PARKING LOT. ACCESS TO THE NEW BUILDING WILL BE VIA THE EXISTING DRIVEWAY OFF OF FRESHWATER BLVD.

THE SITE WILL BE SERVED WITH PUBLIC UTILITIES FROM FRESHWATER BOULEVARD AND EXISTING MALL FACILITIES. SANITARY SEWAGE WILL BE PUMPED TO AN EXISTING MALL SANITARY MANHOLE. AN OIL/ WATER SEPARATOR WILL BE PROVIDED FOR THE SERVICE AREA. SOME STORM WATER WILL BE COLLECTED WITH CONVENTIONAL STORM DRAINS AND CATCH BASINS AND FLOW TO THE EXISTING MALL STORM SYSTEM. THAT SYSTEM WILL INCLUDE A WATER QUALITY UNIT PRIOR TO CONNECTION TO THE EXISTING SYSTEM. ANOTHER PORTION OF THE SITE PLUS ALL ROOF DRAINAGE WILL FLOW TO A NEW OPEN SPACE AREA. THAT AREA WILL THEN FLOW TO THE EXISTING MALL STORM SYSTEM,

THE NEW OPEN SPACE AREA WILL ALSO SERVE TO COMPENSATE FOR FILL WITHIN THE 100 YEAR FLOOD HAZARD AREA.

THE PROJECT WILL BE LANDSCAPED WITH TREES AND SHRUBS IN THE PARKING LOT ISLANDS WITH ADDITIONAL FOUNDATIONS PLANTINGS AROUND THE NEW BUILDINGS AND WALKS.

UTILITY NOTES:

1. THE LOCATIONS OF ALL EXISTING UTILITIES SHOWN ON THESE PLANS ARE APPROXIMATE AND ARE BASED ON AVAILABLE AS-BUILT INFORMATION FROM UTILITY COMPANY RECORDS, THE PROPERTY OWNER, AND LIMITED SURVEY DATA. ALL EXISTING UTILITIES MAY NOT BE SHOWN AND THOSE SHOWN MAY NOT BE ACCURATE. THE CONTRACTOR IS RESPONSIBLE FOR DETERMINING THE EXACT LOCATION OF ALL UTILITIES ON THE SITE PRIOR TO THE START OF ANY CONSTRUCTION ACTIVITY AND NOTIFYING THE DESIGN SITE ENGINEER OF POTENTIAL CONFLICTS WITH PROPOSED ALIGNMENT AND GRADE AND/OR ANY ADJUSTMENTS TO THE PLANS WHICH ARE NECESSARY. TEST PITS WILL BE REQUIRED AT ALL PROPOSED UTILITY CROSSINGS IN ORDER TO DETERMINE UNDERGROUND UTILITY LOCATIONS AND TO IDENTIFY POTENTIAL CONFLICTS WITH VERTICAL AND HORIZONTAL ALIGNMENTS SHOWN ON THE PLANS. TEST PITS SHALL BE COMPLETED BY THE CONTRACTOR AT HIS EXPENSE.
2. CONTACT "CALL BEFORE YOU DIG" AT 1-800-922-4455 TO MARK THE LOCATION OF ALL UNDERGROUND UTILITIES AT LEAST 72 HOURS PRIOR TO THE START OF CONSTRUCTION.
3. A PRE-CONSTRUCTION MEETING WITH TOWN STAFF SHALL BE HELD PRIOR TO START OF CONSTRUCTION.
4. REMOVE/ABANDON ALL EXISTING UTILITIES REQUIRED FOR CONSTRUCTION OF SITE IMPROVEMENTS WHETHER OR NOT SHOWN ON THESE PLANS. ALL WORK SHALL BE IN ACCORDANCE WITH CUSTODIAL UTILITY COMPANY REQUIREMENTS. CONSULT WITH CUSTODIAL UTILITY COMPANY AND ENGINEER PRIOR TO ABANDONING UTILITIES.
5. ALL MATERIALS AND INSTALLATION ARE TO BE IN ACCORDANCE WITH THE TOWN OF ENFIELD, CONN. D.O.T. FORM 817, OR CUSTODIAL UTILITY COMPANY SPECIFICATION, AS APPROPRIATE.
6. ALL NEW SITE UTILITIES ARE TO BE INSTALLED UNDERGROUND, UNLESS INDICATED OTHERWISE.
7. ALL UTILITIES TO BE INSTALLED IN ACCORDANCE WITH UTILITY COMPANY APPLICABLE REQUIREMENTS. FINAL LOCATION OF UTILITY CONNECTIONS IS SUBJECT TO REVISION BY INDIVIDUAL UTILITY COMPANIES PRIOR TO THE INSTALLATION. THE CONTRACTOR IS RESPONSIBLE FOR COORDINATING THE WORK WITH THE APPLICABLE UTILITY COMPANIES.
8. FLOW LINE AND INVERT ELEVATIONS OF ALL STORM AND SANITARY SEWERS MUST BE COORDINATED WITH FINAL ARCHITECTURAL DRAWINGS. NOTIFY DESIGN ENGINEER OF CONFLICTS PRIOR TO START OF CONSTRUCTION.
9. CONNECT ALL ROOF LEADERS AND FOOTING DRAINS INTO NEW STORM DRAINAGE SYSTEM.
10. WATER SERVICE AND FIRE SERVICE INSTALLATION IS TO BE COORDINATED WITH THE CONNECTICUT WATER COMPANY STAFF AND ENFIELD FIRE DEPARTMENT OFFICIALS PRIOR TO THE START OF WORK BY THE CONTRACTOR.
11. BEFORE THE WATER MAIN OR WATER SERVICE LINES ARE IS PLACED INTO SERVICE, THEY SHALL BE INSPECTED, FLUSHED, SANITAIZED, AND TESTED AND FOUND TO BE IN COMPLIANCE WITH CONNECTICUT WATER COMPANY STANDARDS AND SPECIICATIONS.
12. ALL WORK ON THE SANITARY SEWER SHALL BE IN ACCORDANCE WITH THE TOWN OF ENFIELD WATER POLLUTION CONTROL AUTHORITY.
13. BEFORE THE SANITARY SEWER SYSTEM IS PLACED INTO SERVICE, IT IS TO BE INSPECTED, TESTED AND FOUND TO BE IN COMPLIANCE WITH THE TOWN REGULATIONS.
14. ALL WORK RELATED TO GAS, ELECTRIC, TELEPHONE AND COMMUNICATION SERVICE SHALL BE IN ACCORDANCE WITH THE CUSTODIAL UTILITY COMPANY STANDARDS AND SPECIFICATIONS.
15. WHEN TRENCHING IS REQUIRED IN TOWN R.O.W., BACKFILL AND COMPACT FILL AND CONSTRUCT PAVEMENT REPAIR IN ACCORDANCE WITH TOWN OF ENFIELD STANDARDS AND SPECIFICATIONS.
16. COORDINATE PLACEMENT OF TRANSFORMER AND ROUTING OF UTILITY SERVICE WITH EVERSOURCE OFFICIALS.
17. RELOCATE OR RESET, AS APPROPRIATE, ALL ELECTRIC, TELEPHONE, COMMUNICATION SERVICE HANDHOLES, MANHOLES, PULL BOXES, ETC., AS REQUIRED, FOR COMPLETION OF WORK. COORDINATE RELOCATIONS OR RESETTING WITH CUSTODIAL UTILITY COMPANY REPRESENTATIVES.
18. WATER MAIN, WATER SERVICE PIPING, FITTINGS, VALVES, HYDRANTS, CORPORATIONS, ETC. SHALL CONFORM TO CONNECTICUT WATER COMPANY STANDARDS AND SPECIFICATIONS.
19. ALL WATER AND FIRE MAIN AND SERVICE PIPING SHALL BE ANSI/AWWA C151/A21.51 C.L.D.I.P. CLASS 52, UNLESS OTHERWISE SPECIFIED. ALL WATER SERVICE SHALL HAVE A MINIMUM COVER OF 4 1/2 FEET.
20. ALL WATER AND FIRE SERVICE FITTINGS AND VALVES SHALL BE MECHANICAL JOINT AND SHALL BE RESTRAINED USING JOINT RETAINER GLANDS, AND CONCRETE THRUST BLOCKS, UNLESS OTHERWISE SPECIFIED. ALL VALVES SHALL OPEN LEFT.
21. PVC SAN. SEWER PIPE = SDR 35 PVC PIPE W/ PUSH-ON GASKETED JOINTS.
22. DIP = CLASS 52 DUCTILE IRON PIPE.
23. ALL SANITARY SEWER PIPES, FITTINGS, MANHOLES AND ACCESSORIES SHALL CONFORM TO TOWN OF ENFIELD WATER POLLUTION CONTROL AUTHORITY STANDARDS AND SPECIFICATIONS.
24. EXTERNAL GREASE TRAP TO MEET TOWN OF ENFIELD PUBLIC WORKS SPECIFICATIONS AND CT PUBLIC HEALTH CODE REQUIREMENTS.
25. THE SEWER SYSTEM SHALL CONFORM TO TOWN OF ENFIELD, SUBDIVISION REGULATIONS, REVISED AS OF FEBRUARY 12, 2002, AND ON THE TOWN OF ENFIELD PUBLIC WORKS DEPARTMENT DRAWINGS TITLED TYPICAL DETAILS I, II AND III.
26. WPC SHALL BE NOTIFIED 24 HOURS IN ADVANCE FOR ALL INSPECTIONS REQUIRED FOR INSTALLATION OF SEWER SYSTEMS. CALL 860-253-6450, IF NO ANSWER, LEAVE A MESSAGE.

CONSTRUCTION SEQUENCE:

IN GENERAL, THE OVERALL PROJECT WILL FOLLOW THE SEQUENCE BELOW:

1. CONTACT "CALL BEFORE YOU DIG" AT 1-800-922-4455 AT LEAST 48 HOURS PRIOR TO START OF CONSTRUCTION TO HAVE EXISTING UTILITIES MARKED.
2. ATTEND PRECONSTRUCTION MEETING WITH THE TOWN OF ENFIELD OFFICIALS.
3. INSTALL EROSION CONTROL MEASURES PRIOR TO THE START OF CONSTRUCTION.
4. MILL AND RECLAIM EXISTING PAVEMENT WITHIN THE CONSTRUCTION LIMIT.
6. EXCAVATE OPEN SPACE/COMPENSATION AREA.
7. ROUGH GRADE SITE.
8. INSTALL BUILDING FOUNDATIONS.
9. INSTALL UNDERGROUND UTILITIES, LIGHT STANDARDS, AND MAKE UTILITY CONNECTIONS.
10. PREPARE SUBGRADE, INSTALL PAVEMENT BINDER COURSE AND CURBING.
11. INSTALL PAVEMENT WEARING SURFACE.
12. INSTALL SITE AMENITIES. APPLY PAVEMENT MARKINGS AND SIGNS.
13. PLACE TOPSOIL AND LANDSCAPE MATERIALS.
14. REMOVE EROSION CONTROLS AFTER DISTURBED AREAS ARE LANDSCAPED AND MULCHED OR NEW LAWN AREAS STABILIZE. COMPLETE FINAL CLEANING OF STORM SEWER SYSTEM.
15. THE APPROXIMATE DATE FOR START OF CONSTRUCTION IS FALL 2020. THE ESTIMATED COMPLETION DATE IS LATE SUMMER 2021.

EROSION CONTROL DEVICES:

REFER TO THE "CONNECTICUT GUIDELINES FOR SOIL EROSION AND SEDIMENT CONTROL - 2002" (SEE GENERAL EROSION AND SEDIMENT CONTROL NOTE 3) WHEN CONSTRUCTING EROSION CONTROL DEVICES SHOWN ON THESE PLANS.

CE - CONSTRUCTION EXIT IS A CRUSHED STONE PAD ON GEOTEXTILE PROVIDING A CLEANING SURFACE AT POINTS WHERE VEHICLES LEAVE A DISTURBED AREA AND REDUCE TRACKING OF DIRT ONTO PAVED AREAS. THE STONE MUST BE REMOVED AND REPLACED WHEN IT BECOMES FILLED WITH SEDIMENT.

ECB - EROSION CONTROL BLANKET - A MANUFACTURED BLANKET COMPOSED OF BIODEGRADABLE PHOTODEGRADABLE NATURAL OR POLYMER FIBERS AND/OR FILAMENTS THAT HAVE BEEN MECHANICALLY, STRUCTURALLY OR CHEMICALLY BOUND TOGETHER TO FORM A CONTINUOUS MATRIX.

GRSW - GRASSED SWALE: A SHAPED SHALLOW EARTH DRAINAGE WAY USED TO CONVEY EXCESS SURFACE RUNOFF. GRASS VEGETATION SHOULD BE WELL ESTABLISHED BEFORE USE. STABILIZATION WITH NETTING OR MULCH MAY BE REQUIRED.

HBCD - HAYBALE CHECK DAMS SHALL BE STAKED IN A SINGLE ROW ORIENTED PERPENDICULAR TO THE FLOW ALONG THE BOTTOM AND SIDES OF DRAINAGE CHANNELS AND DITCHES. DAMS SHALL BE INSTALLED AT 100' INTERVALS UNLESS OTHERWISE SHOWN ON THE PLANS. THE HAYBALES MUST BE REPLACED WHENEVER THEY BECOME DETERIORATED.

HBEC - HAYBALE EROSION CHECKS SHALL BE STAKED A MINIMUM OF FIVE (5) FEET FROM THE BASE OF DISTURBED SLOPES EXCEEDING EIGHT (8) FEET IN HEIGHT, OR AT LOCATIONS SHOWN ON THE PLANS. LINE OF HAYBALES MUST BE INSTALLED FOLLOWING ELEVATION CONTOURS. PLACE HAYBALES BEFORE STARTING A FILL SLOPE AND AFTER DIGGING A CUT SLOPE. HEEL HAYBALES 4" INTO THE SOIL. STAKE HAYBALES AROUND THE PERIMETER OF ALL CATCH BASINS AND INSTALL FILTER FABRIC WRAP ON CATCH BASIN INLET GRATES. REMOVE ALL SEDIMENT WHEN DEPOSITS REACH ½ BALE HEIGHT. HAYBALES MUST BE REPLACED PERIODICALLY.

IP - INLET PROTECTION: A SEDIMENT CONTROL DEVICE USED DURING CONSTRUCTION THAT MOUNTS UNDER THE GRATE OF A CATCH BASIN, RESIDING INSIDE THE STRUCTURE. IT IS MADE OF PERMEABLE GEOTEXTILE THAT ALLOWS WATER TO PASS, BUT TRAPS SILT AND SEDIMENT. (SILT SACK OR APPROVED EQUAL.) THE SILT SACK MUST BE REMOVED WHEN SILT/SEDIMENT REACHES ONE HALF THE HEIGHT OF THE DEVICE. REMOVE SEDIMENTS AND DEPOSIT ON STABLE AREA OF SITE AND RINSE DEVISE FOR REUSE. REPLACE WHEN DAMAGED.

RRLS - RIP RAP LEVEL SPREADER: A RIPRAP LINED APRON INSTALLED AT A ZERO PERCENT GRADE TO ABSORB THE INITIAL IMPACT OF STORMWATER DISCHARGE FROM THE STORM DRAINAGE SYSTEM AND FURTHER REDUCE FLOW VELOCITIES TO PREVENT EROSION DOWNSTREAM.

RRPP - RIPRAP PLUNGE POOL: A RIPRAP DISSIPATION DEVICE INSTALLED AT THE ENDS OF DRAINAGE CULVERTS CREATING A POOL WITH BOTTOM BELOW THE CULVERT. WATER IN THE POOL REDUCES VELOCITY AND THE POOL COLLECTS HEAVY SEDIMENT. RIPRAP PLUNGE POOLS REQUIRE PERIODIC REMOVAL OF ACCUMULATED DEPOSITS. RRPP IS DESIGNED PER THE "CONNECTICUT DEPARTMENT OF TRANSPORTATION, DRAINAGE MANUAL - 2000"

SFEC - SEDIMENT FENCE EROSION CHECK IS A SYNTHETIC TEXTILE BARRIER DESIGNED TO FILTER SEDIMENT FROM SURFACE WATER. PLACEMENT SHALL BE SIMILAR TO HBEC AND INSTALLATION REQUIRES ANCHORING THE FENCE BOTTOM TO PREVENT BYPASS. ALL SEDIMENT SHALL BE REMOVED IF DEPOSITS REACH ONE (1) FOOT IN DEPTH. ADDITIONAL SUPPORT (SUCH AS SNOW FENCE OR WIRE FENCE) ON THE DOWNHILL FACE MAY BE REQUIRED TO STRENGTHEN SEDIMENT FENCE IN HIGH FLOW LOCATIONS.

SL - SEDIMENT LOGS: A SEDIMENT CONTROL DEVICE CONSISTING OF AN OUTSIDE, OPEN WEAVE CONTAINMENT FABRIC FILLED WITH FIBERS. IT IS DESIGNED TO PROVIDE A FLEXIBLE, LIGHTWEIGHT, POROUS, SEDIMENT CONTROL DEVICE WITH THE ABILITY TO CONFORM TO THE TERRAIN UPON WHICH IT IS INSTALLED. IT IS DESIGNED TO DISSIPATE VELOCITY OF FLOW AND FILTER AND TRAP SEDIMENTS UPGRADIENT AND WITHIN THE DEVICE.

GENERAL NOTES:

1. EXISTING REFERENCE SURVEY ENTITLED "ALTA/ACSM LAND TITLE SURVEY, PROPERTY SURVEY, PREPARED FOR PARAMOUNT COMMONS OF ENFIELD, LLC, ENFIELD COMMONS, ENFIELD, CONNECTICUT" BY F. A. HESKETH AND ASSOCIATES, INC., SHEET 1 AND 2, DATED 08-30-1990 REVISED 03-27-2009.
2. N.G.V.D. (1983) VERTICAL DATUM SHOWN CONVERTED FROM N.A.V.D. 1929. SEE REFERENCED SURVEY FOR HORIZONTAL CONTROL POINTS AND BENCHMARKS.
3. ALL WORK AND MATERIALS TO CONFORM TO THE PROJECT SPECIFICATIONS, CT DOT FORM 817, TOWN OF ENFIELD STANDARD DETAILS AND CUSTODIAL UTILITY COMPANY DETAILS AND SPECIFICATIONS, AND THE DETAILS SHOWN ON THESE PLANS, AS APPLICABLE.
4. PRIOR TO ANY EXCAVATION THE CONTRACTOR SHALL VERIFY THE LOCATION OF ALL UNDERGROUND UTILITIES BY CALLING 1-800-922-4455 AT LEAST 48 HOURS IN ADVANCE.
5. THE LOCATION OF ALL UTILITIES SHOWN IS APPROXIMATE AND ARE BASED ON AVAILABLE AS-BUILT INFORMATION FROM UTILITY COMPANY RECORDS, THE PROPERTY OWNER, AND LIMITED SURVEY DATA BY F. A. HESKETH AND ASSOC., INC. ALL EXISTING UTILITIES MAY NOT BE SHOWN, AND THE LOCATIONS SHOWN MAY NOT BE ACCURATE. THE CONTRACTOR IS RESPONSIBLE FOR DETERMINING THE EXACT LOCATION OF ALL UTILITIES ON THE SITE PRIOR TO THE START OF ANY CONSTRUCTION ACTIVITY AND NOTIFYING THE DESIGN SITE ENGINEER OR ARCHITECT, AS APPLICABLE, OF ANY ADJUSTMENTS TO THE PLANS WHICH ARE NECESSARY. TEST PITS WILL BE REQUIRED AT ALL PROPOSED UTILITY CROSSINGS IN ORDER TO DETERMINE UNDERGROUND UTILITY LOCATIONS AND TO IDENTIFY POTENTIAL CONFLICTS WITH VERTICAL AND HORIZONTAL ALIGNMENTS SHOWN ON THE PLANS. TEST PITS SHALL BE COMPLETED BY THE CONTRACTOR AT HIS EXPENSE.
6. ALL UTILITIES TO BE INSTALLED, RELOCATED, AND/OR PROTECTED IN ACCORDANCE WITH THE CUSTODIAL UTILITY COMPANY STANDARDS AND WITH ALL FEDERAL, STATE, AND LOCAL REQUIREMENTS. FINAL LOCATION OF UTILITY CONNECTIONS OR METHODS OF PROTECTION ARE SUBJECT TO REVISION BY INDIVIDUAL UTILITY COMPANIES PRIOR TO THE INSTALLATION OR IMPLEMENTATION OF PROTECTION. THE CONTRACTOR IS RESPONSIBLE FOR COORDINATING THE WORK WITH THE APPLICABLE UTILITY COMPANIES, FOR COORDINATING UTILITY CONNECTIONS AND/OR RELOCATIONS WITH THE SITE WORK AND BUILDING CONSTRUCTION, AND COORDINATING THE PROTECTION OF ALL UTILITIES NECESSARY TO PERFORM THE WORK SHOWN ON THE PLANS. COORDINATION ACTIVITIES SHALL BE SCHEDULED AND TAKE PLACE PRIOR TO THE START OF CONSTRUCTION ACTIVITIES EFFECTING THE UTILITIES INSTALLATION, REPLACEMENT, AND/OR PROTECTION.
7. INSTALLATION OF UTILITIES SHALL BE COMPLETED IN STRICT ACCORDANCE WITH THE PLANS BOTH IN VERTICAL AND HORIZONTAL ALIGNMENTS, UNLESS SPECIFICALLY APPROVED BY THE SITE ENGINEER.
8. A PRE-CONSTRUCTION MEETING AND AUTHORIZATION TO PROCEED WILL BE REQUIRED PRIOR TO START OF ANY CONSTRUCTION INCLUDING REMOVAL OF TREES OR DEMOLITION ACTIVITIES. PROCEDURES FOR SUCH PRE-CONSTRUCTION MEETING AND AUTHORIZATION TO PROCEED SHALL BE IN ACCORDANCE WITH STATE, TOWN AND OWNER REQUIREMENTS. THE CONTRACTOR SHALL COORDINATE THIS MEETING.
9. ALL WORK ON THIS PROJECT SHALL BE COMPLETED IN CONFORMANCE WITH THE REQUIREMENTS OF ALL FEDERAL, STATE, AND LOCAL PERMITS ISSUED FOR THIS PROJECT.
10. EROSION AND SEDIMENTATION CONTROL MEASURES SHALL BE INSTALLED AND MAINTAINED IN ACCORDANCE WITH THE PLAN, SPECIFICATIONS, AND THE EROSION AND SEDIMENTATION CONTROL NOTES.
11. TREES SHALL BE FLAGGED AND APPROVED BY THE SITE ENGINEER PRIOR TO REMOVAL.
12. NO STUMPS ARE TO BE BURIED ON SITE.
13. ALL DEBRIS SHALL BE REMOVED FROM THE SITE BY THE CONTRACTOR.
14. DRAINAGE SHALL BE MAINTAINED THROUGHOUT THE PROJECT SO AS NOT TO CAUSE FLOODING OF ROADWAYS OR DAMAGE TO PRIVATE PROPERTY.
15. ALL SANITARY SEWER WORK SHALL BE COORDINATED WITH THE ENFIELD WATER POLLUTION CONTROL (WPC). WPC TEL. NUMBER: 860-253-6450.
16. ELECTRIC, WATER, GAS, TELEPHONE AND SANITARY SEWER CUSTODIAL UTILITY COMPANY IS THE CONNECTICUT LIGHT & POWER, THE CONNECTICUT WATER COMPANY, HAZARDVILLE WATER COMPANY, YANKEE GAS, SOUTHERN NEW ENGLAND TELEPHONE COMPANY AND ENFIELD WATER POLLUTION CONTROL, RESPECTIVELY.
17. NO VEHICLES OR FLUID FILLED MATERIALS (INCLUDING SANI-CANS, HYDRAULIC EQUIPMENT, ETC.) SHOULD BE STORED WITHIN 50 FEET OF WETLANDS OR WATERCOURSES.

DRAINAGE SYSTEM NOTES:

1. CPE = CORRUGATED POLYETHYLENE PIPE CONFORMING TO CT DOT FORM 817, M.08.01-18, TYPE S.
2. PVC STORM DRAIN PIPE SHALL CONFORM TO CT DOT FORM 817, M.08.01-20 & 21.
3. RCP SHALL CONFORM TO CT DOT FORM 817, M.08.01-7 (CLASS V WHERE SPECIFIED).
4. RCFES SHALL CONFORM TO CT DOT FORM 817, M.08.01-11 COMPATIBLE WITH SPECIFIED PIPE.
5. CATCH BASINS, MANHOLES, AND OTHER DRAINAGE STRUCTURES SHALL CONFORM TO CT DOT ENGINEERING STANDARDS AND CT DOT FORM 817 M.08.02 AS APPLICABLE.
6. FLOW LINE AND INVERT ELEVATIONS OF ALL STORM DRAIN ROOF LEADERS MUST BE COORDINATED WITH FINAL ARCHITECTURAL DRAWINGS. NOTIFY DESIGN ENGINEER OF CONFLICTS PRIOR TO START OF CONSTRUCTION.
7. UNDERGROUND UTILITIES DEPICTED ON THIS DRAWING ARE A COMPILATION OF FIELD SURVEY DATA, RECORD DESIGN PLANS, AND READILY AVAILABLE INFORMATION. NOT ALL UTILITIES MAY BE SHOWN, AND THOSE SHOWN MAY NOT BE ACCURATE. THE CONTRACTOR SHALL VERIFY ALL UTILITY LOCATIONS PRIOR TO START OF CONSTRUCTION OF UTILITIES. CONDUCT TEST PITS AT ALL UTILITY CROSSINGS AND POINT OF CONNECTIONS WITH EXISTING UTILITIES. NOTIFY DESIGN ENGINEER OF POTENTIAL CONFLICTS WITH PROPOSED ALIGNMENT AND GRADE.
8. ALL MATERIALS AND INSTALLATION PER TOWN OF ENFIELD, CT DOT FORM 817 OR CUSTODIAL UTILITY COMPANY SPECIFICATION, AS APPROPRIATE.
9. CONNECT ALL ROOF LEADERS AND FOOTING DRAINS INTO NEW STORM DRAINAGE SYSTEM.
10. WORK WITHIN THE TOWN ROAD RIGHT OF WAY WILL REQUIRE A PERMIT FROM THE ENFIELD DEPARTMENT OF PUBLIC WORKS. THE CONTRACTOR SHALL OBTAIN SAID PERMIT PRIOR TO INITIATING CONSTRUCTION ACTIVITIES. ALL WORK WITHIN THE TOWN HIGHWAY RIGHT OF WAY SHALL CONFORM TO CONDITIONS OF THE TOWN OF ENFIELD DPW PERMIT.

STANDARD TOWN OF ENFIELD NOTES:

1. THE DEVELOPER OF A SUBDIVISION SHALL NOTIFY THE TOWN ENGINEER'S OFFICE 24 HOURS IN ADVANCE TO SCHEDULE INSPECTION OF SUBBASE GRAVEL, PAVEMENT, SIDEWALKS, DRAINAGE STRUCTURES AND PIPES, SANITARY SEWERS AND MANHOLES. TELEPHONE 8 A.M. - 4 P.M. AT 253-6363. PRIVATE SITES WILL BE INSPECTED FOR SANITARY SEWERS AND ANY IMPROVEMENT TO BE TURNED OVER TO THE TOWN.
2. ALL SITE WORK SHALL BE CONSTRUCTED IN ACCORDANCE WITH THE TOWN OF ENFIELD SPECIFICATIONS AS OUTLINED IN THE SUBDIVISION REGULATIONS.
3. EROSION AND SEDIMENTATION CONTROLS SHALL BE INSTALLED IN ACCORDANCE WITH THE "EROSION AND SEDIMENT CONTROL HANDBOOK" PREPARED BY THE SOIL CONSERVATION SERVICE 2002.
4. ALL EXCAVATIONS WITHIN TOWN RIGHT-OF-WAY REQUIRES A STREET EXCAVATION PERMIT ISSUED BY THE ENGINEERING DEPARTMENT.
5. NO SITE IMPROVEMENTS SUCH AS DRAINAGE, SANITARY SEWERS, SIDEWALKS, EXCAVATIONS, FILLING, PAVEMENT OPERATIONS, ETC., SHALL COMMENCE UNTIL THE SITE ENGINEERING BOND, AS REQUIRED BY THE ENFIELD PLANNING AND ZONING COMMISSION, IS POSTED WITH THE TOWN OF ENFIELD.
6. NO STUMPS TO BE BURIED ON SITE.
7. PRE-CONSTRUCTION CONFERENCE FOR CONSTRUCTION OF A SUBDIVISION ONLY, SHALL INCLUDE THE TOWN ENGINEER OR HIS AGENT. NOTIFICATION OF CONFERENCE SHALL BE 48 HOURS IN ADVANCE.
8. THE DEVELOPER SHALL HIRE A REGISTERED PROFESSIONAL ENGINEER TO INSPECT THE SITE DURING CONSTRUCTION. TO INSURE THE WORK IS CONSTRUCTED IN ACCORDANCE WITH APPROVED PLANS, THE ENGINEER WILL BE REQUIRED TO CERTIFY ON AN AS-BUILT PLAN THAT THE PROJECT WAS CONSTRUCTED IN ACCORDANCE WITH THE APPROVED PLANS AND ALL MATERIALS WERE PLACED IN ACCORDANCE WITH THE SITE PLANS AND SPECIFICATIONS, PRIOR TO RELEASE OF ANY BONDS.

LONG TERM STORMWATER SYSTEM AND OVERALL SITE MAINTENANCE PLAN

IT IS IMPORTANT THAT A LONG TERM MAINTENANCE PLAN BE IMPLEMENTED AND EXECUTED THROUGHOUT THE LIFE OF THE FACILITY.

STORMWATER SYSTEM

1. MAINTENANCE OF THE ON-SITE STORM WATER SYSTEM IS THE RESPONSIBILITY OF THE PROPERTY OWNER. THIS INCLUDES ALL CATCH BASINS, YARD DRAINS, PIPING, MANHOLES, OUTLET STRUCTURE, ROOF LEADERS AND THE DRAINAGE PIPES.
2. THE FOLLOWING SCHEDULE OF MAINTENANCE SHALL BE FOLLOWED:

   A. IN GENERAL, GOOD HOUSEKEEPING PRACTICES SHALL BE INCORPORATED INTO THE ROUTINE SITE AND FACILITY MAINTENANCE PLAN TO MINIMIZE DEPOSITION OF SEDIMENT, LITER AND CONTAMINANTS INTO THE STORM DRAINAGE SYSTEM.

   B. PAVED PARKING AND LOADING AREAS AND WALKS SHALL BE SWEPT OF DEBRIS, SAND, AND LITTER AT LEAST TWICE ANNUALLY, IN PARTICULAR, LATE SPRING AFTER WINTER SANDING OPERATIONS, AND IN LATE FALL AFTER LEAF LITTER CLEANUP.

   C. CATCH BASINS AND THE OUTLET STRUCTURE SHALL BE INSPECTED SEMIANNUALLY, FOLLOWING SPRING AND FALL SITE CLEANUP. ACCUMULATED SEDIMENT AND DEBRIS SHALL BE REMOVED AND DISPOSED OF TO APPROVED OFF-SITE LOCATIONS.
3. MAINTENANCE RECORDS DOCUMENTING SYSTEM INSPECTIONS AND CLEANING OPERATIONS SHALL BE MAINTAINED BY THE PROPERTY OWNER AND SHALL BE MADE AVAILABLE FOR INSPECTION BY THE TOWN AS REQUESTED.

SITE MAINTENANCE

1. ONGOING GENERAL MAINTENANCE OF THE SITE IS THE RESPONSIBILITY OF THE PROPERTY OWNER. THIS INCLUDES LITTER CONTROL, FERTILIZER AND PESTICIDE MANAGEMENT, SNOWPLOWING, SANDING/SALTING AND SNOWPILE STOCKPILING. IN GENERAL, GOOD HOUSEKEEPING PRACTICES SHALL BE INCORPORATED INTO THE ROUTINE SITE AND FACILITY MAINTENANCE PLAN TO MINIMIZE DEPOSITION OF SEDIMENT, LITER AND OTHER POTENTIAL CONTAMINANTS.
2. WITH REGARD TO LAWN AND LANDSCAPE MANAGEMENT, IT IS IMPERATIVE THAT THE PROPOSED LANDSCAPING BE MAINTAINED FOLLOWING CURRENT HORTICULTURAL PRACTICES TO INSURE THE HEALTH OF THE LAWN AND PLANTINGS AND MINIMIZE THE NEED TO USE FERTILIZERS AND PESTICIDES. THE APPLICATION OF FERTILIZERS AND PESTICIDES SHALL BE COMPLETED FOLLOWING AN INTEGRATED PEST MANAGEMENT PLAN PREPARED AND APPLIED BY A LICENSED PROFESSIONAL IN STRICT CONFORMANCE WITH THE MANUFACTURER'S RECOMMENDATIONS AND IN COMPLIANCE WITH ALL APPLICABLE GOVERNMENTAL LAWS AND REGULATIONS.
3. SNOW FROM THE PARKING AND SIDEWALK AREAS SHALL BE STOCKPILED AT LOCATIONS AS DEPICTED ON THE PLANS AROUND THE SITE TO AVOID THE CREATION OF LARGE SNOWPILE AREAS.
4. THE APPLICATION RATE OF SAND AND ICE MELT MATERIALS SHALL BE MINIMIZED TO THE SMALLEST AMOUNT NECESSARY TO MAINTAIN SAFE TRAVEL AND PEDESTRIAN CONDITIONS.

   APPLICATION OF ICE MELT MATERIALS SHALL BE LIMITED TO PEDESTRIAN ACCESS ROUTES AND BUILDING ENTRANCES, AND GENERALLY PROHIBITED FROM PAVED PARKING AND DRIVEWAY AREAS, UNLESS ABSOLUTELY NECESSARY DUE TO EXCESSIVE ICE BUILDUP.

   ALTERNATIVES TO STANDARD NACL ROAD SALT SHALL BE EVALUATED AND UTILIZED ON AN ANNUAL BASIS. AT THIS TIME, CALCIUM CHLORIDE AND/OR MAGNESIUM CHLORIDE ARE PREFERRED ALTERNATIVES.

File IW # PH#

FAH
F. A. Hesketh & Associates, Inc.
3 Creamery Brook, East Granby, CT 06026 · 146 N W Broad Street, Southern Pines, NC 28387
Phone (860) 653-8000 · Fax (860) 844-8600 · Phone (910) 692-2844 Fax (910) 692-3356
Civil & Traffic Engineers · Surveyors · Planners · Landscape Architects www.fahesketh.com · mail@fahesketh.com

No.	Date	Description

Revisions:

NOTES
PREPARED FOR
AAA CLUB ALLIANCE, INC.
ENFIELD COMMONS
25 HAZARD AVENUE
ENFIELD, CONNECTICUT

Date: 07-06-2020	Drawn by: RJK	Job no: 19001	Sheet no: 1 OF 1
Scale: NTS	Checked by: DSZ		

NT-1

Q:\2019\19001 - Enfield Common\AAA VE Redesign\Submission\AAAn101.dwg, NT-1, Jul 09, 2020 - 4:38:09 PM

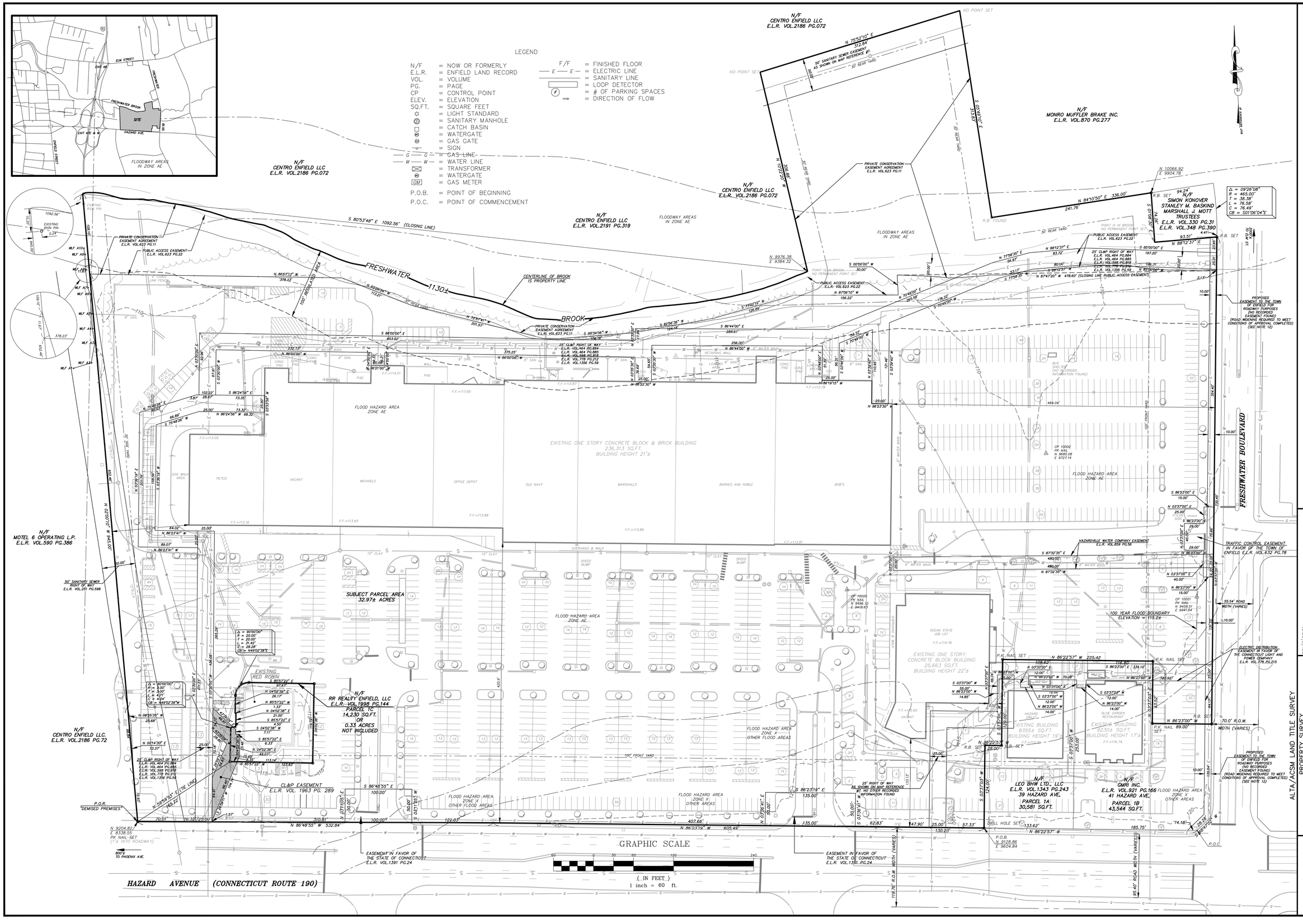

F. A. Hesketh & Associates, Inc.
6 Creamery Brook, East Granby, CT 06026
Civil & Traffic Engineers · Surveyors · Planners · Landscape Architects
Phone (860) 653-8000
Fax (860) 844-8600
e-mail heskeith@snet.net

revisions:

no.	date	description
1	10-14-04	UPDATE ALTA/TITLE
2	11-09-04	CLIENT COMMENTS
3	04-21-05	UPDATE/ALTA
4	04-27-05	CLIENT COMMENTS
5	03-27-09	UPDATE ALTA/TITLE
6	08-28-20	TOWN APPLICATIONS

ALTA/ACSM LAND TITLE SURVEY
PREPARED FOR
PROPERTY SURVEY
PARAMOUNT COMMONS AT ENFIELD LLC
ENFIELD COMMONS
HAZARD AVENUE & FRESHWATER BOULEVARD
ENFIELD, CONNECTICUT

date: 08-30-90 | drawn by: CAD | job no: 02134.B
scale: 1" = 60' | checked by: TSH | sheet no: 1 OF 2

PS-1

Y:\ENFIELD COMMONS\2002\AAA SUB.dwg, Layout1, Sep. 10, 2020 - 12:18:58 PM

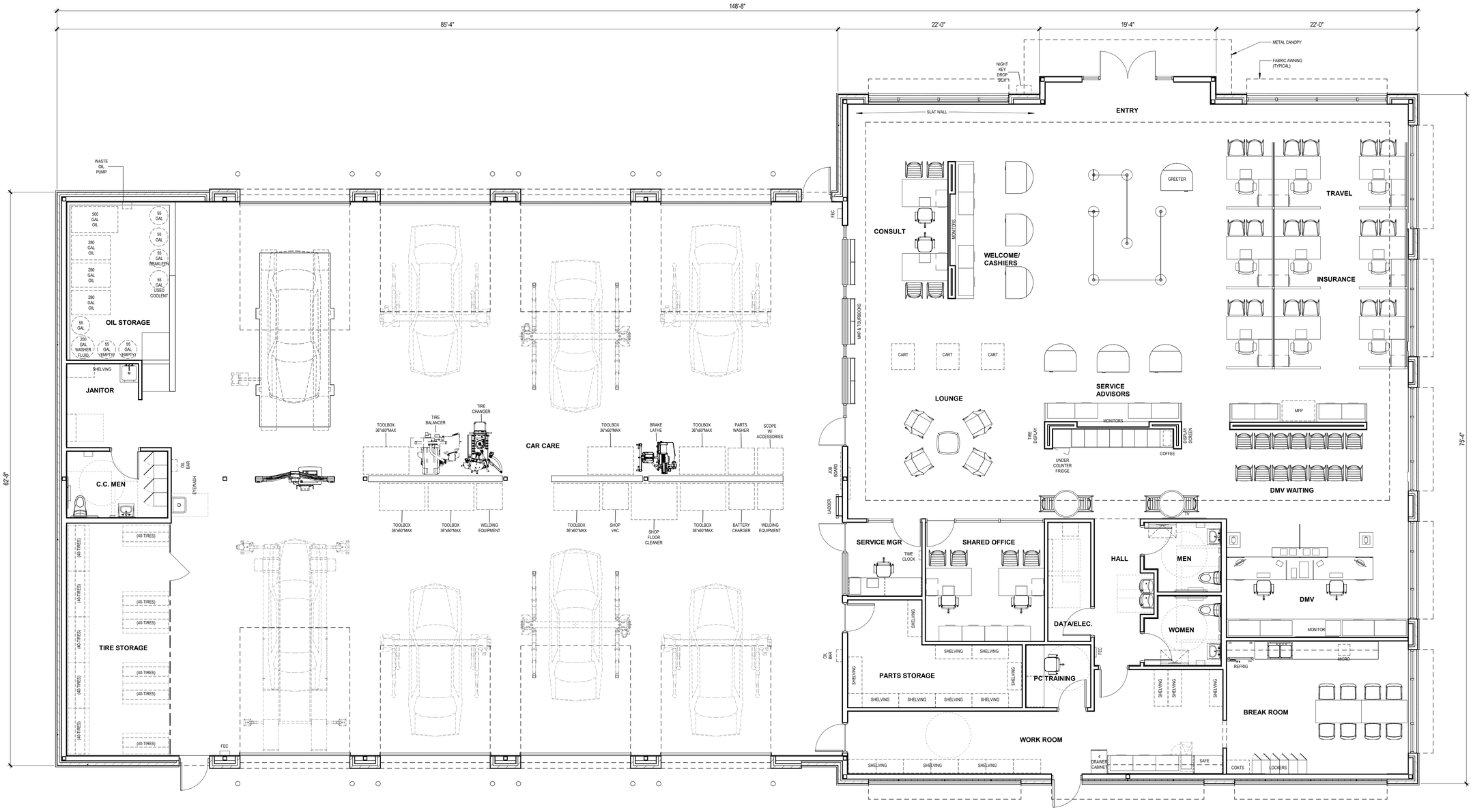

AAA CAR CARE CENTER	
OFFICE/RETAIL	4,542 SF
CAR CARE	5,146 SF
TOTAL	**9,688 SF**

SCHEMATIC FLOOR PLAN

\\ADC3\Projects\78590082 AAA-CA_Enfield\CTG_Active\11_Revit\78590082-Enfield CT_CENTRAL_2019.rvt

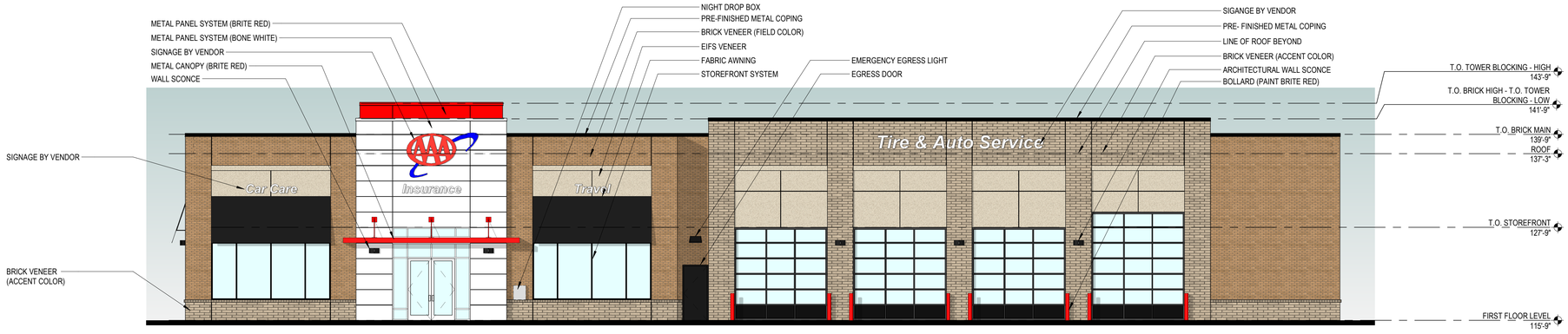

SOUTH ELEVATION

1/8" = 1'-0"

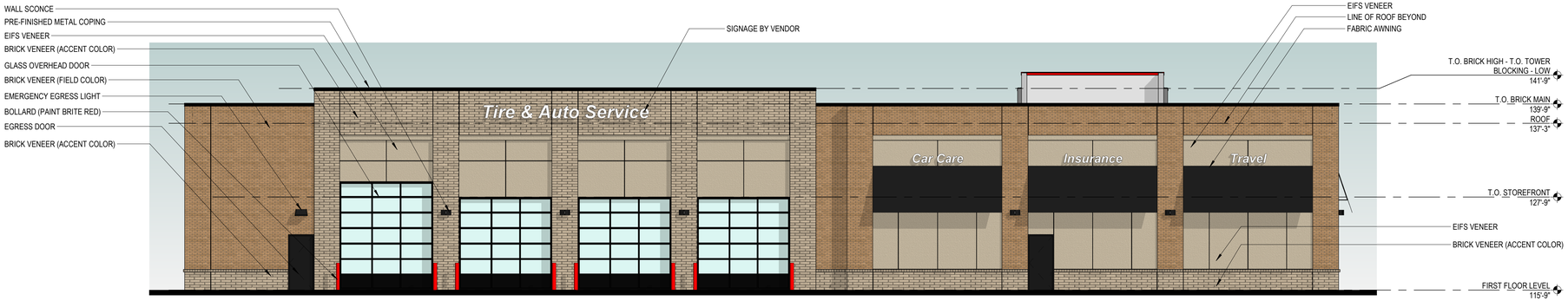

NORTH ELEVATION

1/8" = 1'-0"

WEST ELEVATION

1/8" = 1'-0"

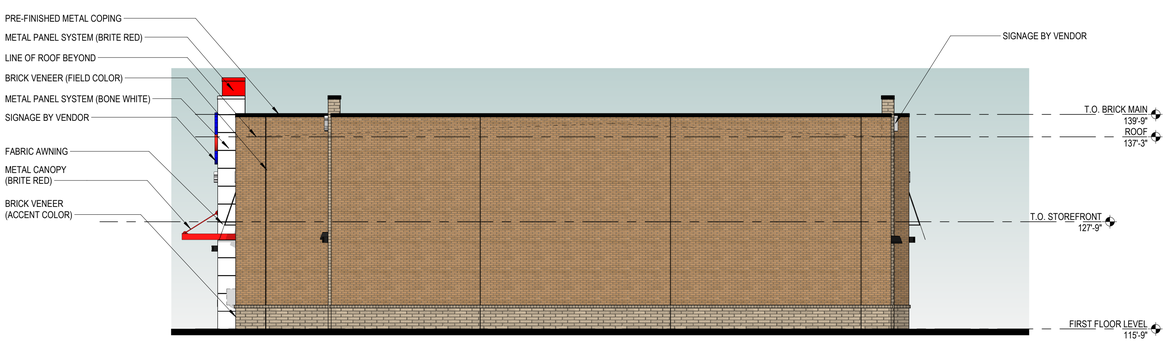

EAST ELEVATION

1/8" = 1'-0"

EXTERIOR MATERIALS LEGEND

EIFS VENEER - DRYVIT
113 AMARILLO WHITE, TEXTURE - SANDPEBBLE NT

2 1/4" X 3 5/8" X 7 5/8" BRICK VENEER
FIELD COLOR - TAYLOR BRICK - 372 TP AUTUMN BLEND - WIRECUT
MORTAR COLOR - FLAMINGO BRIXMENT - C-247A CHAMOIS

3 5/8" X 3 5/8" X 15 5/8" BRICK VENEER
ACCENT COLOR - TAYLOR BRICK - 319 GRAY - WIRECUT
MORTAR COLOR - FLAMINGO BRIXMENT - C-247A CHAMOIS (INCLUDING ROWLOCK)

OMEGA LITE METALS PANELS, "BONE WHITE"

OMEGA LITE METAL PANELS, "BRITE RED"

PRE-FINISHED METAL COPING
- @ RED MTL. PANELS, COPING TO BE FIRESTONE UNA-CLAD "REGAL RED SR"
- @ WHITE MTL. PANELS, COPING TO BE FIRESTONE UNA-CLAD "BONE WHITE SR"
- @ BRICK, COPING COLOR TO BE FIRESTONE UNA-CLAD "MATTE BLACK SR"

FABRIC AWNINGS TO BE FIRESIST, BLACK 82008-0000
- FLAMESPREAD RATING TO BE IN ACCORDANCE WITH NFPA 701
- AWNING FRAME COLOR: BLACK

EXTERIOR HOLLOW METAL DOORS AND FRAMES TO BE PAINTED TO STOREFRONT

CANOPY COLOR TO MATCH OMEGA LITE METAL PANELS "BRITE RED" (SUBMIT SAMPLE)

EXT. ALUM STOREFRONT TO BE FACTORY PRE-FINISHED
-@ BRICK, MATTE BLACK
-@ WHITE MTL. PANELS, BONE WHITE

OVERHEAD DOORS, DUMPSTER GATES: BLACK

BOLLARDS: AAA RED - PMS 485

SCHEMATIC BUILDING ELEVATIONS

THE INFORMATION IN THIS DOCUMENT IS THE EXCLUSIVE PROPERTY OF PROGRESSIVE AE. IT IS PROVIDED SOLELY FOR USE ON THIS PROJECT. OWNER REPRODUCTION OR DISTRIBUTION OF THIS DOCUMENT OR ANY PORTION OF IT MAY NOT BE MADE WITHOUT PROGRESSIVE AE'S WRITTEN CONSENT.